卡丽 KARAT

安装说明书 INSTALLATION INSTRUCTIONS

爱诗丽II挂墙式浴缸淋浴龙头
ATHENEE II BATH & SHOWER FAUCET
45378T-CP

BEFORE YOU BEGIN

Please read these instruction carefully familiarize yourself with the required tools,materials,and installation sepuences.Follow the sections that pertain to your patticular installation. This will help you avoid costly mistakes.In addition to proper installation,read all operating and safety instructions.
All infromation in these instructions is based upon the latest product infromation available at the time of publication. Karat reserves the right to make changes in product characteristics, packageing, or availability at any time without notice.
These instructions contain important care, cleaning,and warranty information,**please leave instructions for the consumer**

NOTES:
Flush the water supply pipes thoroughly to remove debris.
The minimum inlet water pressure for the diverter is 0.05Mpa(0.5bar)
The hightest working pressure foe handspray is 0.5Mpa (5bars). If it exceeds 0.5Mpa(5bars),a pressure reducer is needed. The hightest water and environment temperature is 60°C please keep handspray away from heater,or maybe damage it and hurt user.

安装之前

请仔细阅读说明书，熟悉所需工具、材料和安装顺序，参照相关章节完成您所需的安装，以避免昂贵的损失，除了正确的安装外，请详阅所有的操作和安全说明。

本说明书所含的一切资料均以印刷时所有的最新产品为准，卡丽公司保留权利随时更改产品特性、包装或供应情况，恕不另行通知。

本说明书也包含了有关保养、清洁及产品担保等重要信息-**请交予用户保存**。

注意事项：
一定要先彻底冲洗供水管以及清除管道中的杂质。
切换阀正常工作的最小水压为：0.05Mpa(0.5bar)。

花洒最高工作水压为0.5Mpa(5bars)，水压超过0.5Mpa (5bars),时需要安装减压阀。花洒最高工作温度及环境温度为60°C。请特别注意，花洒需远离浴霸，否则可能损坏花洒，甚至对使用者造成伤害。

ROUGHING-IN

Unit:mm

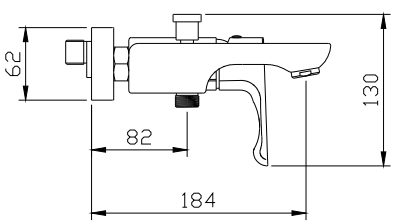

尺寸图

单位: 毫米

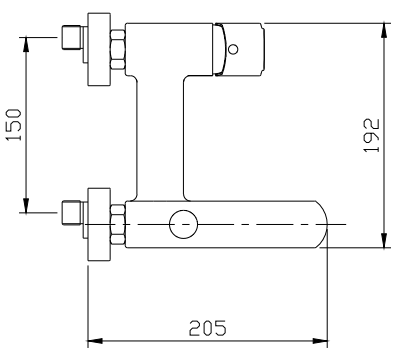

INSTALLATION

1 HOW TO INSTALLATION THE FAUCET
to perform installation ,installer must privide G1/2 female supply fittings,spaced 150mm apart , level and not extending beyond finished wall surface. Flush the water supply pipes thoroughly to remove any debris .

安装

1 安装龙头
为使安装顺利，G1/2内螺纹管道配件应已经安装好，预留150mm的间距，保持水平，不要凸出墙面，彻底清洗供水管，以清除供水管中的杂质。

1126777T-01-A

Install the two offset connectors into the hot and cold supply pipes. Use appropriate thread sealants on pipe threads.
Adjust the center-to -center distance between the connectors to 150mm and level.Thread the trim caps onto the connectors so that the trim caps contact the finished wall.

使用合适的螺纹密封膏，安装两个接头到冷热供水管。

保持两个接头的中心到中心的距离为150mm，并调整到同一水平。把装饰罩旋入接头，紧贴墙面。

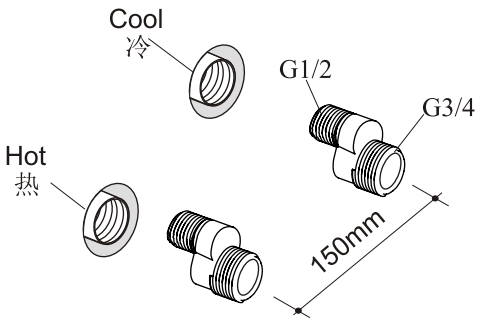

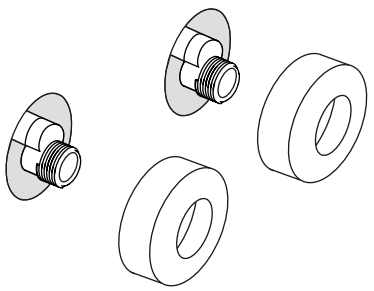

Insert washer seals into supply nuts of the faucet. Thread the faucet supply nuts onto the connectors and tighten. Connect shower hose to faucet shower outlet and hand spray. Seal provide with hose must be installed in hose inlet end.

把密封垫片放入水龙头的螺母内，把螺母拧再接头上，并旋紧。
将垫圈安装在淋浴软管接进水一头，把淋浴软管一头接到水龙头出水口，另一头接花洒。

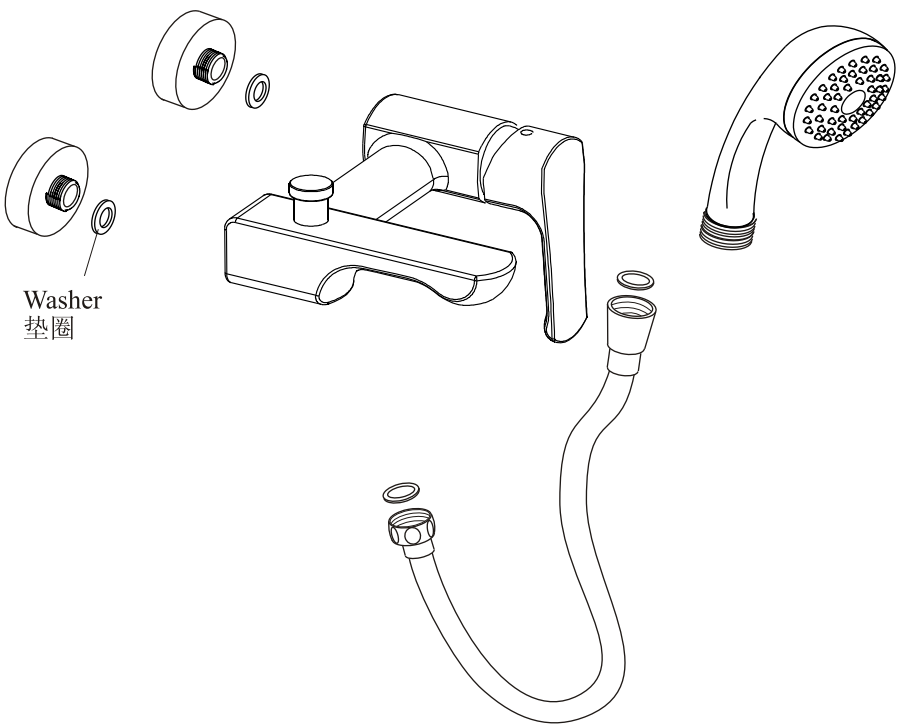

(图中花洒及软管仅作为安装说明，不随货供, 客户需另行购买)

2 HOW TO INSTALLATION THE BRACKET
Take off the locking pin from the bracket. Mark bracket base mounting hose location on the wall. Drill two hose in the finish wall as required.press the anchors into the

2 安装支架
先将支架座从支架上扣下，在淋浴软管可及的高度选择一个安装支架的位置。在墙壁上标上安装支架底板位置的标记，按标记钻两个洞。

1126777T-01-A

hose and screw the self-tapping screws into the anchors though the sleeve. Tighten them by screwdriver. Aline the bugle of the bracket and the slot of the sleeve.Slide the bracket and onto the sleeve and insert the locking pin into the hole of the bracket and sleeve.

将膨胀塞插入洞中，然后按照图示将自攻螺钉旋入膨胀塞中，用螺丝刀拧紧。将支架内壁的凹槽对准底板的凸台插入。

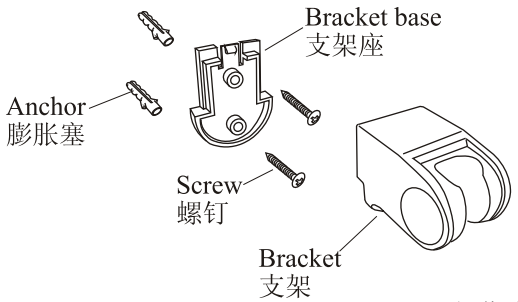

(仅作为安装说明，不随货供, 客户需另行购买)

HANDLE OPERATION

Turn the handle gently. Left for hot water. Right for cold water.
Water flows out from spout when diverter is in the normal position and is diverted to hand spray when the diverter knob is lifted.

使用说明

将手柄轻轻抬起，左手为热水，右手为冷水。

切换阀处于正常位置时，出水口出水。提起切换阀时，手持花洒出水。

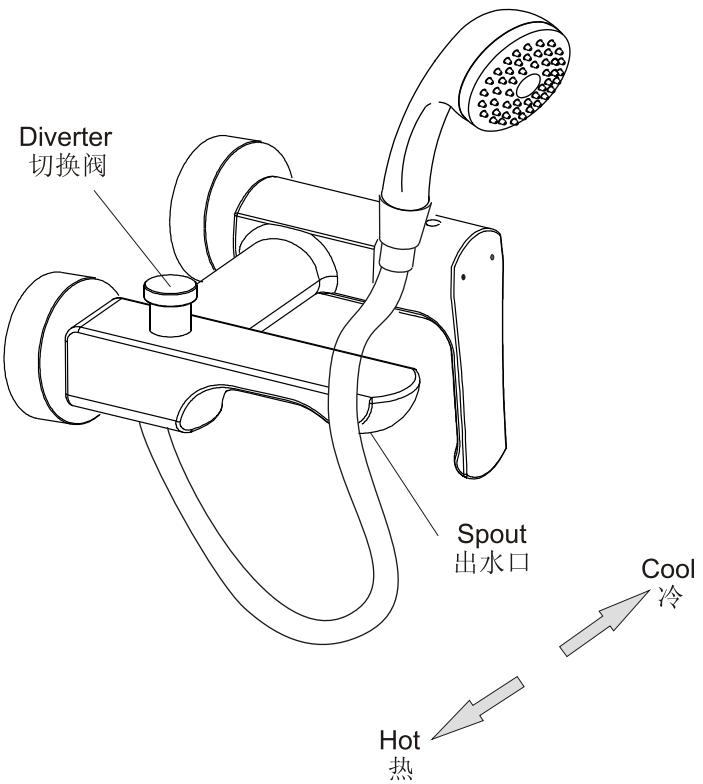

1126777T-01-A

CLEANING INSTRUCTIONS

All finishes : clean the finish with a mild soap and warm water. wipe entire surface complately dry with a clean soft cloth. Many cleaners may contain chemicals , such as ammonia chlorine, toilet cleaner etc., Which could adversely affect the finish and are not recommended for cleaning.
Don't use abrasive cleaner or solvents on karat faucets and fitting.

清理说明

适用于所有加工处理过的表面：
以中性肥皂水清洗镀层表面，再以干净的软布彻底擦干整个表面。许多清洁剂，比如氨水、去污粉及洁厕灵等，会对电镀表面造成伤害，切勿使用。

有腐蚀性的清洁剂或溶剂不可使用于卡丽的水龙头及其附件上。

FIVE -YEARS WARRANTY

Our company provides five years warranty for its faucets valve to be leak and drip free during normal residential use. We also warrant all other aspects of its faucets to be free of defects of materrial and workmanship during normal residential use for one year. Our company will be responsible any problens caused by manufacturing defects provided with the invoice. Our company will,at its election ,repair ,replace or make appropriate adjustment where our company inspection discloses any such defects occurring in normal usage within warranty.

The warranty, including products, is limited clearly. Our company is not responsible for other damages appeared after the warranty. Also,the warranty dose not cover problems arising from labor charges,incorrect use and installation.

五年有限担保

本产品自购买之日起，在正常使用下任何由阀芯造成的龙头滴漏现象，我司将提供长达五年的质量担保，同时对正常使用下的龙头制造和质料上的瑕疵提供一年的质量担保。在质保期内，凭购货发票，我司将免费承担由制造质量引起的任何问题。经核查后，我司有权决定是修理、更改、还是做适当的调整。

这里的担保，包括产品都已明确地限制在该担保期内。本公司对以后出现的损坏不负有任何责任。担保也不包括外观损伤，使用不当及未按说明书安装的损失。

Shanghai Kohler International Trade Co., Ltd.,
Address: Room324, 2 Xinlin Rd,
Waigaoqiao Free Trade Zone, Shanghai
Tel: 021-26062000
Postcode: 200131

上海科勒国际贸易有限公司
地址：上海市外高桥保税区新灵路106号2号楼324室
电话：021-26062000
邮编：200131

1126777T-01-A

卡丽 KARAT®

维修零件图 SERVICEPARTSPAGE

爱诗丽II挂墙式浴缸淋浴龙头
ATHENEE II
BATH & SHOWER FAUCET
45378T-CP

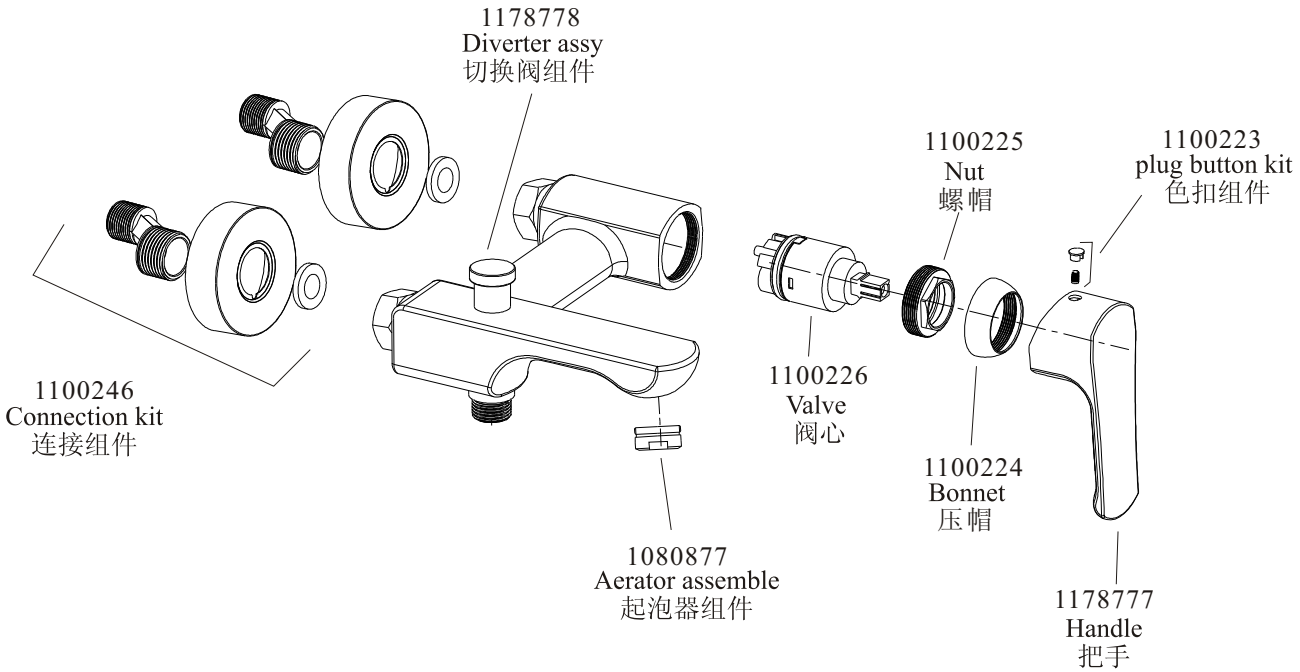

1126777T-01-A