卡丽 KARAT

安装说明书 INSTALLATION INSTRUCTIONS

欧佩II/OPAL II
单把单孔脸盆龙头
LAVATORY FAUCET, SINGLE HOLE
12073T-M-CP

BEFORE YOU BEGIN

Please read these instruction carefully familiarize yourself with the required tools,materials,and installation sepuences.Follow the sections that pertain to your patticular installation. This will help you avoid costly mistakes.In addition to proper installation,read all operating and safety instructions.
All infromation in these instructions is based upon the latest product infromation available at the time of publication. Karat reserves the right to make changes in product characteristics, packageing, or availability at any time without notice.
These instructions contain important care, cleaning,and warranty information,**please leave instructions for the consumer**
NOTES:
Flush the water supply pipes thoroughly to remove debris.

安装之前

请仔细阅读说明书，熟悉所需工具、材料和安装顺序，参照相关章节完成您所需的安装，以避免昂贵的损失，除了正确的安装外，请详阅所有的操作和安全说明。

本说明书所含的一切资料均以印刷时所有的最新产品为准，卡丽公司保留权利随时更改产品特性、包装或供应情况，恕不另行通知。

本说明书也包含了有关保养、清洁及产品担保等重要信息-**请交予用户保存**。

注意事项：
一定要先彻底冲洗供水管以及清除管道中的杂质。

ROUGHING-IN

Unit:mm

尺寸图

单位: 毫米

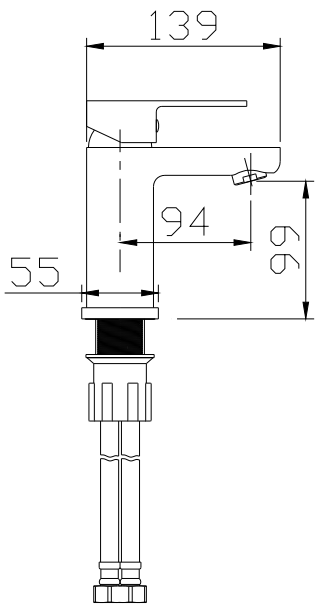

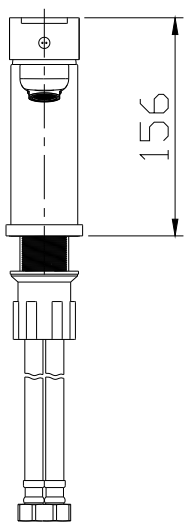

INSTALLATION

1 HOW TO INSTALLATION THE FAUCET
Put the washer into the bottom of the faucet body through the flexible hoses and mounting stud.

安装

1 安装龙头
把垫圈通过软管和固定螺栓装到龙头底部。

1104982-T01-A

Insert the installation bolt into the lavatory hose. Position the faucet. From underside of the lavatory, and secure the faucet with the nut.

把供水软管插到脸盆孔中，调整龙头位置，从脸盆的下方用螺母上紧以固定龙头。

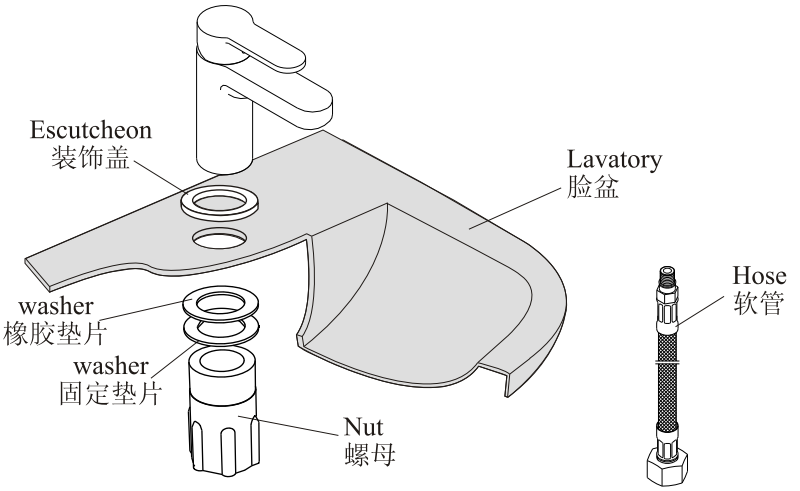

1 HOW TO INSTALLATION THE WASTE

1 安装去水

Screw off the fixing nut and gasket and washer from the body as is shown in the picture .

如图示,从落水本体上取下固定螺母及止水密封圈、垫圈.

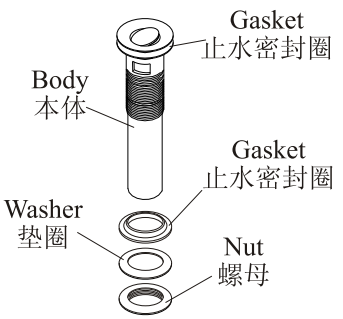

Insert the body of the rainspout from the water outlet of the basin, apply some sealant to the top of the drain of the basin and install the rainspout with water-tight washer and fixing nut from the bottom of the basin. (Note: Don't do that with great impetus, to prevent breaking the basin.)

将落水本体及止水密封圈从脸盆的落水孔穿过，抹少许密封剂在脸盆的下水口顶部，并从脸盆的底部将止水密封圈、垫圈及固定螺母锁到落水上（注：不可用力过大， 以免对脸盆造成破坏）

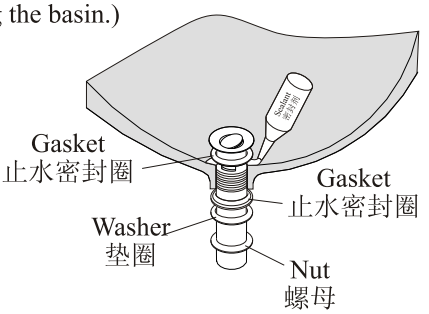

1104982-T01-A

Users can press the body several times after installed to check if the rainspout works normally.

安装完毕，用户可以按压几次，测试落水是否正常工作

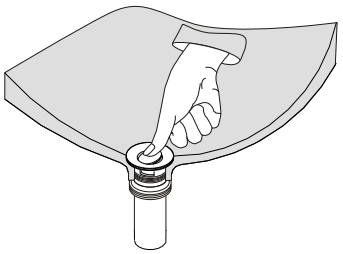

INSTALLATION CHECKOUT 安装后检查

Ensure that all coupling nuts are tight. Ensure that the lever handle is in the close position.
Turn on the main water supply, and check for leaks. Repair as needed.

确保所有衔接螺母都已拧紧，确保手柄处在关闭的位置，开启主水源，检查是否有漏水，如有请重新拧紧。

Remove the aerator assembly and hand spray. Run hot and cold water through the faucet for about a minute to remove any debris. Check for leaks. Remove any debris from the aerator assembly. Shut the faucet off, and reinstall the aerator assembly and hand spray.

取下起泡器组件和花洒。把冷热水都打开，让水流出一分钟以清除杂质，检查漏水。清洗起泡器并关闭龙头，装回起泡器组件和花洒。

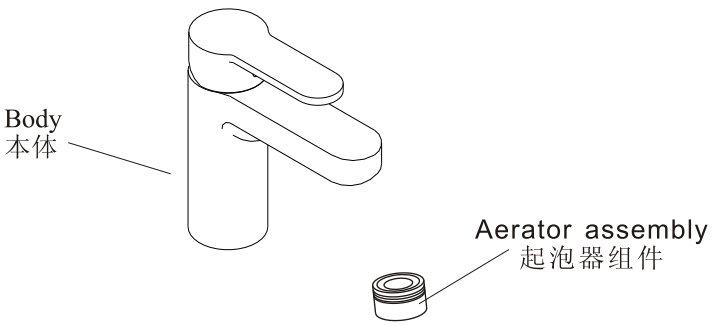

HANDLE OPERATION

Lift the handle gently. Turn Left for hot water. Turn Right for cold water.

将手柄轻轻提起，左手为热水，右手为冷水。

CLEANING INSTRUCTIONS 清理说明

All finishes : clean the finish with a mild soap and warm water. wipe entire surface complately dry with a clean soft cloth. Many cleaners may contain chemicals , such as ammonia chlorine, toilet cleaner etc., Which could adversely affect the finish and are not recommended for cleaning.
Don’t use abrasive cleaner or solvents on karat faucets and fitting.

适用于所有加工处理过的表面：
以中性肥皂水清洗镀层表面，再以干净的软布彻底擦干整个表面。许多清洁剂，比如氨水、去污粉及洁厕灵等，会对电镀表面造成伤害，切勿使用。

有腐蚀性的清洁剂或溶剂不可使用于卡丽的水龙头及其附件上。

FIVE -YEARS WARRANTY

Our company provides five years warranty for its faucet valve to be leak and drip free during normal residential use. We also warrant all other aspects of its faucets to be free of defects of material and workmanship during normal residential use for one year. Our company will be responsible any problems caused by manufacturing defects provided with the invoice. Our company will, at its election, repair, replace or make appropriate adjustment where our company inspection discloses any such defects occurring in normal usage within warranty.

The warranty, including products, is limited clearly. Our company is not responsible for other damages appeared after the warranty. Also,the warranty dose not cover problems arising from labor charges,incorrect use and installation.

五年有限担保

本产品自购买之日起，在正常使用下任何由阀芯造成的龙头滴漏现象，我司将提供长达五年的质量担保，同时对正常使用下的龙头制造和质料上的瑕疵提供一年的质量担保。在质保期内，凭购货发票，我司将免费承担由制造质量引起的任何问题。经核查后，我司有权决定是修理、更改、还是做适当的调整。

这里的担保，包括产品都已明确地限制在该担保期内。本公司对以后出现的损坏不负有任何责任。担保也不包括外观损伤，使用不当及未按说明书安装的损失。

Shanghai Kohler International Trade Co., Ltd.,
Address: Room324, 2 Xinlin Rd,
Waigaoqiao Free Trade Zone, Shanghai
Tel: 021-26062000
Postcode: 200131

上海科勒国际贸易有限公司
地址：上海市,外高桥,保税区,新灵路106**号**2**号楼**324**室**
电话：021-26062000
邮编：200131

1104982-T01-A

卡丽 KARAT®

维修零件图 SERVICEPARTSPAGE

欧佩II/OPAL II

单把单孔脸盆龙头

LAVATORY FAUCET, SINGLE HOLE
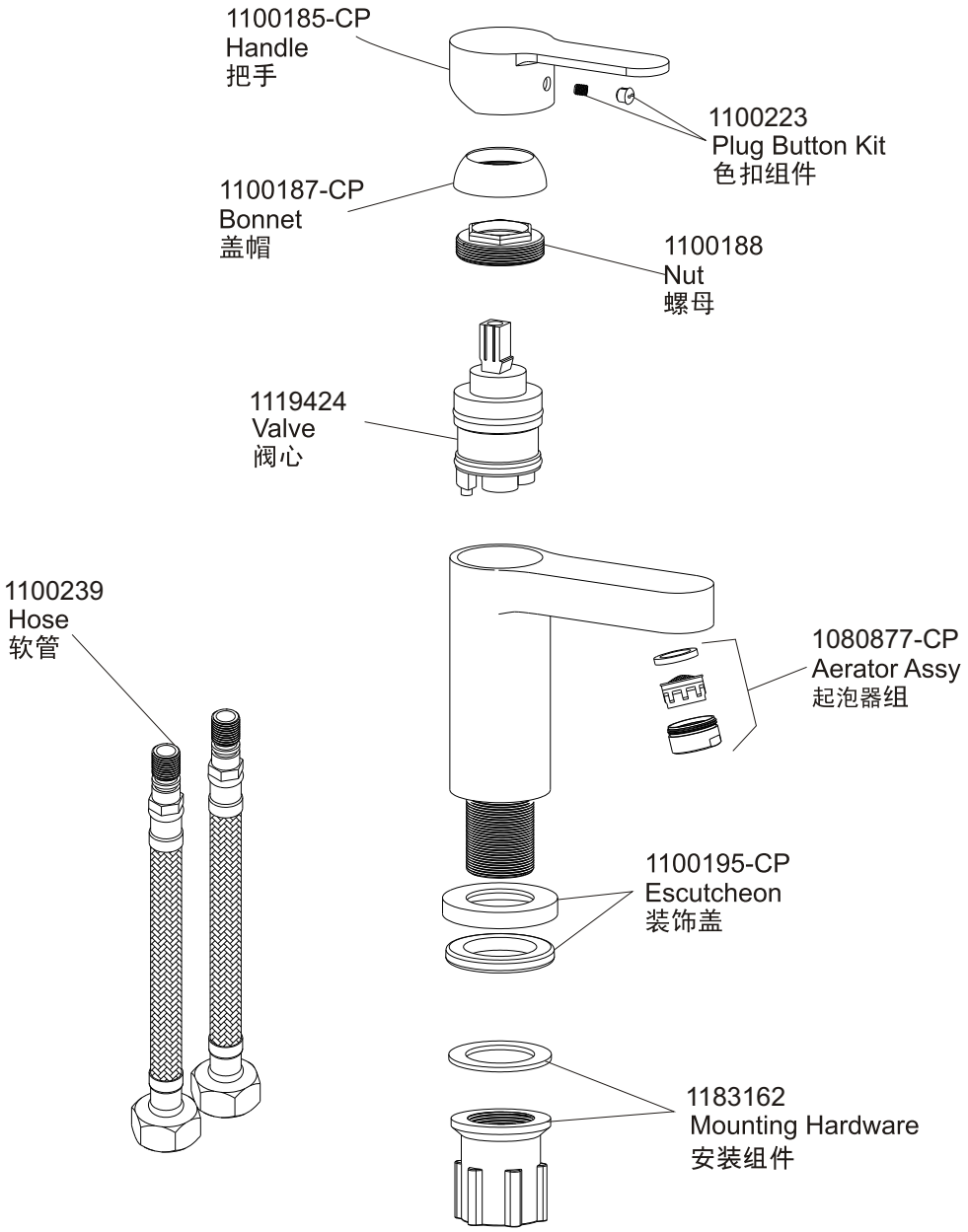
12073T-M-CP