卡丽 KARAT®

安装说明书 INSTALLATION INSTRUCTIONS

VENUS WALL-HUNG WOODEN CABINET
维纳斯挂墙式实木多层板浴室柜
45547T-WF

BEFORE YOU BEGIN

Please read these instructions carefully to familiarize yourself with the required tools, materials, and installation sequences. Follow the sections that pertain to your particular installation. This will help you avoid costly mistakes. In addition to proper installation, read all operating and safety instructions.
All information in these instructions is based upon the latest product information available at the time of publication. Kohler China. reserves the right to make changes in product characteristics, packaging, or availability at any time without notice.
These instructions contain important care, cleaning, and warranty information-**please leave instructions for the consumer.**
Turn off the water supply.
The pluming installation must comply with Water Supply Regulations/Bye-laws, Building Regulations or any particular regulations and practices, specified by the local water company or water undertakers. The installation should be carried out by a plumber.
Before installation carefully inspect the new fixture for any signs of damage.

安装之前

请仔细详阅本指引，以便熟悉所需工具、物料及安装程序。请遵照适用的章节来安装本产品，以免安装失当导致不必要的损失。除了有关正确的安装方法之外，还务请详阅所有操作及安全指引。

本指引所载之一切资料，均以印刷时所有之最新产品情况为基础，卡丽保留权利随时更改产品特性、包装或供应情况，恕不另行通知。安装家具之前，请先确认所有必需的电气工作均已完成。

本指引也包含了有关保养、清洁及担保等重要资料-**请交予用户保存**。

关闭供水。
管道安装必须遵循当地所有给排水、建筑或者其他的特别规定。管道安装人员必须具备相应资格。

安装之前，仔细检查新产品是否有损伤。

SAFETY: WARNINGS

Karat products are precision-engineered and should give continued superior and safe performance, provided:

1. They are installed, commissioned, operated and maintained in accordance with the recommendations given in this Manual.

2. Periodic attention is given, as necessary, to maintain the product in good functional order. Recommended guidelines are given in the **MAINTENANCE** section.

Carefully inspect the new fixture for any signs of damage.

When installing Karat Products, manufacturers guidelines for power tool safety should be followed.

安全：警告

卡丽产品经过精确制造，性能卓越，经久耐用。为保证产品品质，您必须:

1. 按照此手册中推荐的方法进行安装、起动、操作及维护。

2. 如有需要，定期检查，令产品保持良好性能状态。**日常维护**章节中列有推荐方法。

仔细检查新产品是否有损伤。

在安装卡丽产品时，必须遵循制造商相关电动工具的安全的指令。

ROUGHING-IN

尺寸图

UNIT : mm
单位：毫米

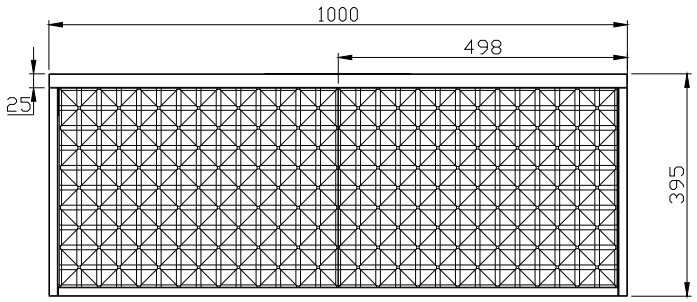

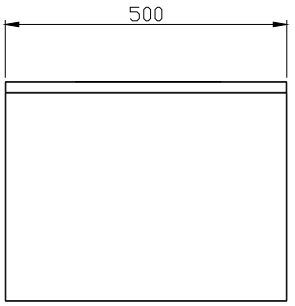

INSTALLATION 安装

INSTALL CABINET

1. Mark the position of cabinet according to dimensions as illustrated,

⚠ **Caution!** Avoid the cables and pipes inner set when drilling in the wall.

安装主柜

1. 根据图示,在墙壁上标示出挂墙安装孔的位置,

⚠ 小心！在墙壁上钻孔时请务必小心避开内设的缆线和管道。

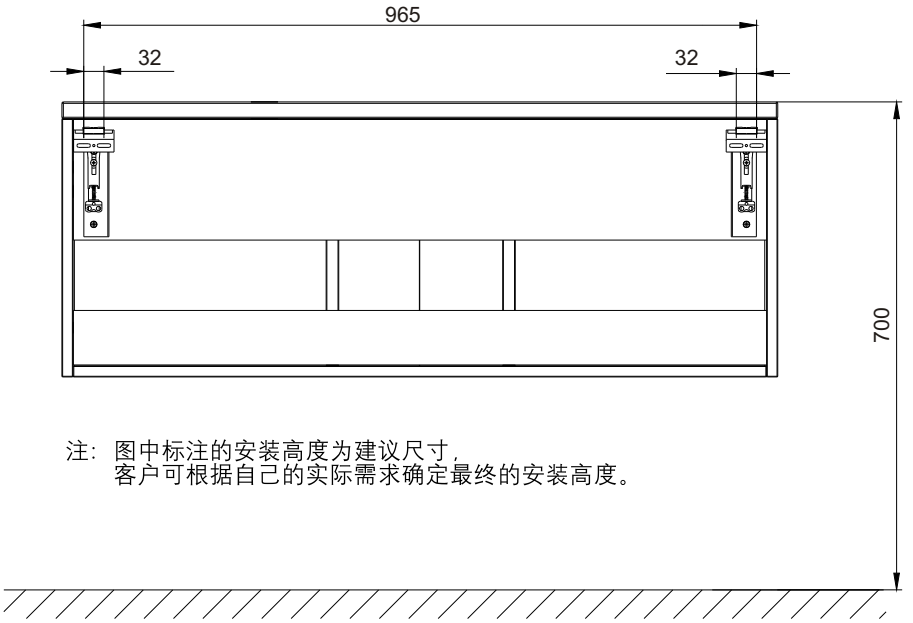

UNIT : mm
单位：毫米

注：图中标注的安装高度为建议尺寸，
客户可根据自己的实际需求确定最终的安装高度。

2. Drill holes for fixing the bracket. Using a level, ensure that the hanged bracket is level.

3. Use suitable plugs and bolts, and fix the hanged bracket on the wall.

2. 钻好挂墙托片的安装孔。使用水平仪检查，确保挂墙托片水平。

3. 使用合适的入墙胶塞和螺钉，将挂墙托片固定在墙上。

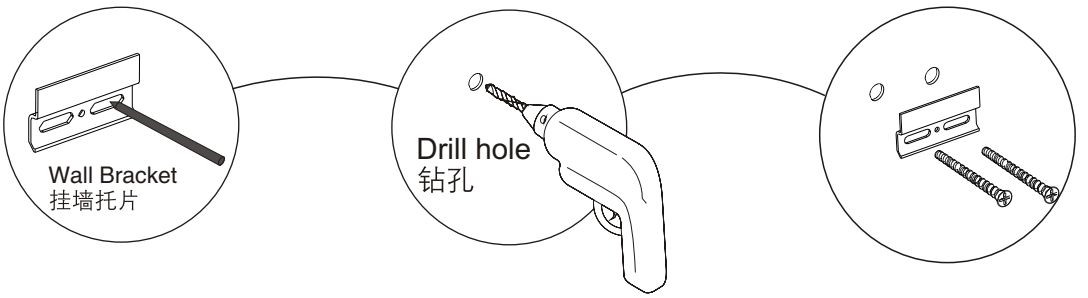

4. Hang the washbasin cabinet on the wall, and position the suspension on the hanged bracket.
5. Set the washbasin cabinet onto the wall bracket. Be sure the cabinet adjusted level and the back board of cabinet appressed to the wall by adjusting the screws of wall clips.

4. 将柜体挂在墙上，挂墙吊码放置于挂墙托片上。

5. 将脸盆柜放置到挂墙托片上，并确认将脸盆柜调节到水平状态，调节吊码的螺钉使脸盆柜背板紧贴墙壁。

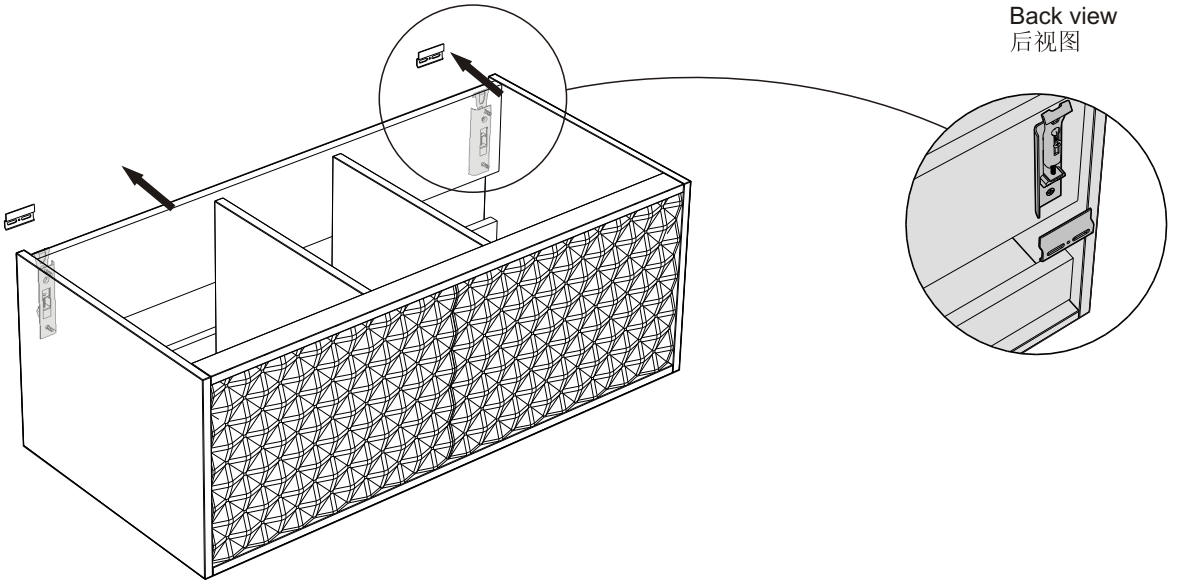

6. Put the top on the cabinet, Be sure the top adjusted level .

6. 将台面放在柜体上，调整好位置，在四周打上硅胶。

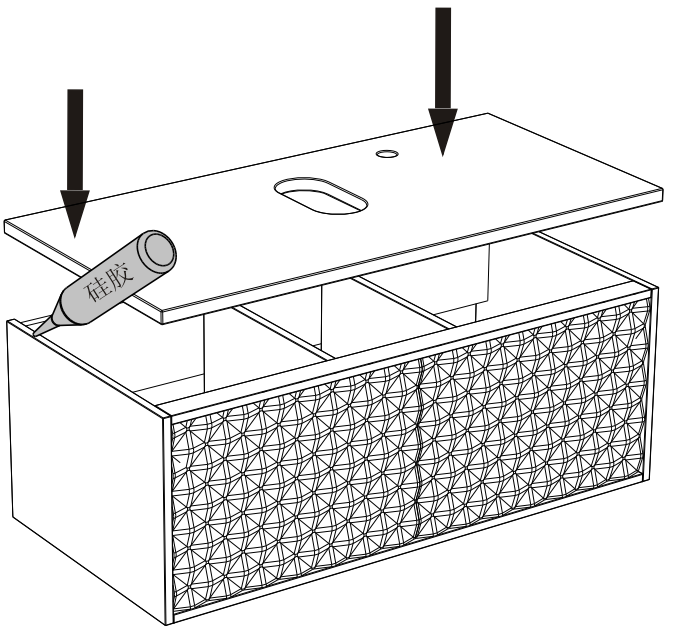

Connect Drainage

1. Inwall drainage (P-Trap)
   Please install the drain assembly and faucet as shown. Please set the water supply and drainage position according to the suppliers instructions. You can adjust the height of shelf to fit the drain assembly.

连接排水管

1. 入墙式排水管(P弯管)
   请按照如图所示安装排水管和龙头。请遵照供应商所提供的说明在墙上设置进/排水管位置。您可以调节搁板的高度以适合排水管的位置。

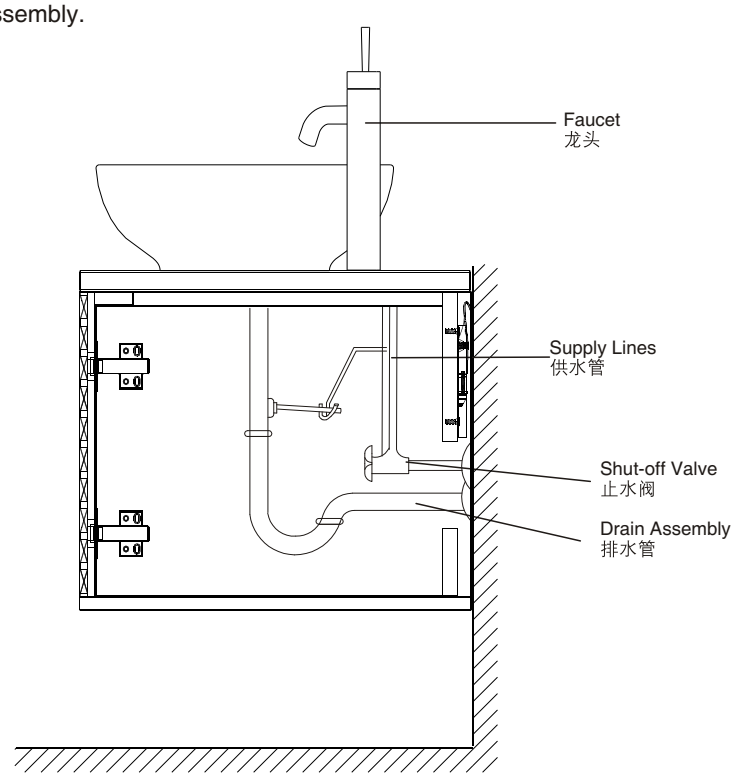

2. Floor drainage (S-Trap)
   Please install the drain assembly and faucet as shown. Please set the water supply and drainage position according to the suppliers instructions.

2. 地排水（S弯管）
   请按照如图所示设置排水管和龙头。请遵照供应商所提供的说明设进水管位置。

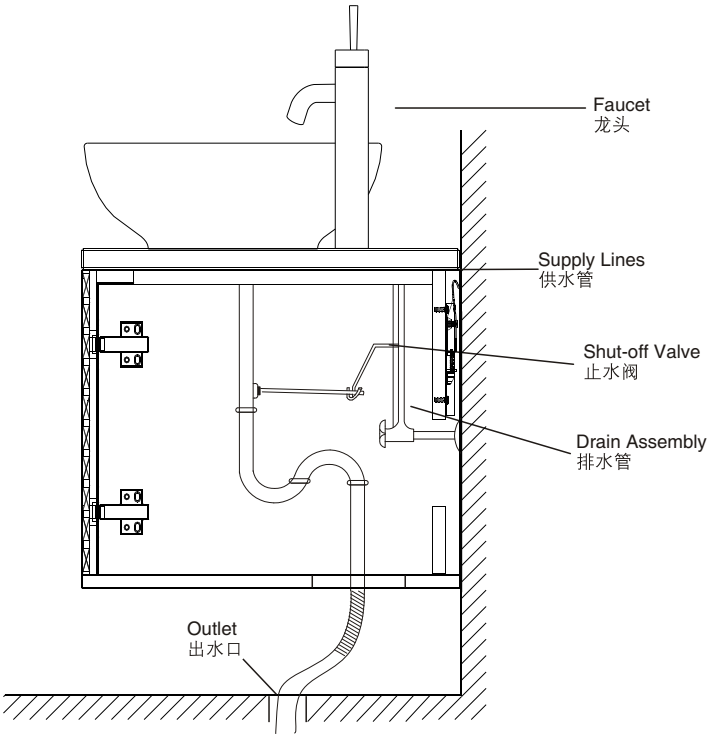

USER MAINTENANCE

Warn! Risk of product damage.

1. Many cleansers contain abrasive and chemical substance which is not suitable for cleaning stainless steel, enamel, plating or plastic products. You may use mild cleansers or soaps to clean the surfaces. Wipe any splashes of cleaner solutions from the surface with clean soft cloth.

2. Maintain ventilation in the bathroom, and separate the dry area from the damp one if conditions permit. Try to open the door and windows of the bathroom and maintain good ventilation.

3. Kohler bathroom cabinet are dealt with strict procedures for damp-proof, whose good damp-proof function ensures good performance even in bathroom of huge humidity. Yet do not splash and pour water directly on the bathroom cabinet. Make sure that the bathroom is not over damp and wipe any splashes from surfaces immediately.

4. Maintenance of door board: Clean and wipe door board regularly, and wipe the condensation vapor with dry and soft cloth.

5. Ensure that electrical connections for appliances such as head lamp is insulated wipe mirror surface with chamois regularly to guarantee the persistent excellent performance.

6. Please do not sit, lean or step on the basin cabinet.

日常维护

警告！小心产品受损。

1. 许多清洁剂都含有研磨剂及化学物质，不可用于清洁不锈钢、搪瓷、镀层或塑料制品。这些表面须使用温和的清洁剂或皂液进行清洁，将残余洗涤剂洗干净，然后用干净的软布擦干。

2. 卫生间请保持良好的通风状态，有条件的可以干、湿分离，平常尽量保持浴室空气畅通，养成开窗开门的习惯。

3. 卡丽浴柜都经过严格的防潮处理，但防潮并不是防水，使用时不可随意任浴柜被水浇、溅。良好的防潮性能可以保证在高相对湿度时仍有良好使用性，所以请避免卫生间过于潮湿，遇有水迹要及时擦干。

4. 门板的保养：经常用软布定期清洁、擦拭，洗浴后的冷凝水蒸气应用干布擦净，保持门板的干爽。

5. 照明灯等电器连接要确保绝缘、防潮镜面最好用麂皮经常擦拭，可以保障使用质量经久如一。

6. 日常使用时，请勿坐、倚、靠、踩踏在脸盆柜上。

ONE -YEAR WARRANTY

Our company provides one year warranty for its cabinet free during normal residential use. Our company will be responsible any problens caused by manufacturing defects provided with the invoice. Our company will,at itselection ,repair ,replace or make appropriate adjustment where our company inspection discloses any such defects occurring in normal usage within warranty.

The warranty, including products, is limited clearly. Our company is not responsible for other damages appeared after the warranty. Also,the warranty dose not cover problems arising from labor charges,incorrect use and installation.

一年有限担保

本产品自购买之日起，我司将提供一年的质量担保，在质保期内，凭购货发票，我司将免费承担由制造质量引起的任何问题。经核查后，我司有权决定是修理、更改、还是做适当的调整。

这里的担保，包括产品都已明确地限制在该担保期内。本司对以后出现的损坏不负有任何责任。担保也不包括外观损伤，使用不当及未按说明书安装的损失。

Shanghai Kohler International Trade Co., Ltd.,
Address: Room324, 2 Xinlin Rd, Waigaoqiao Free Trade Zone, Shanghai
Tel: 021-26062000
Postcode: 200131

上海科勒国际贸易有限公司
地址：上海市外高桥保税区新灵路106号2号楼324室
电话：021-26062000
邮编：200131

VENUS WALL-HUNG WOODEN CABINET
维纳斯挂墙式实木多层板浴室柜
45547T-WF

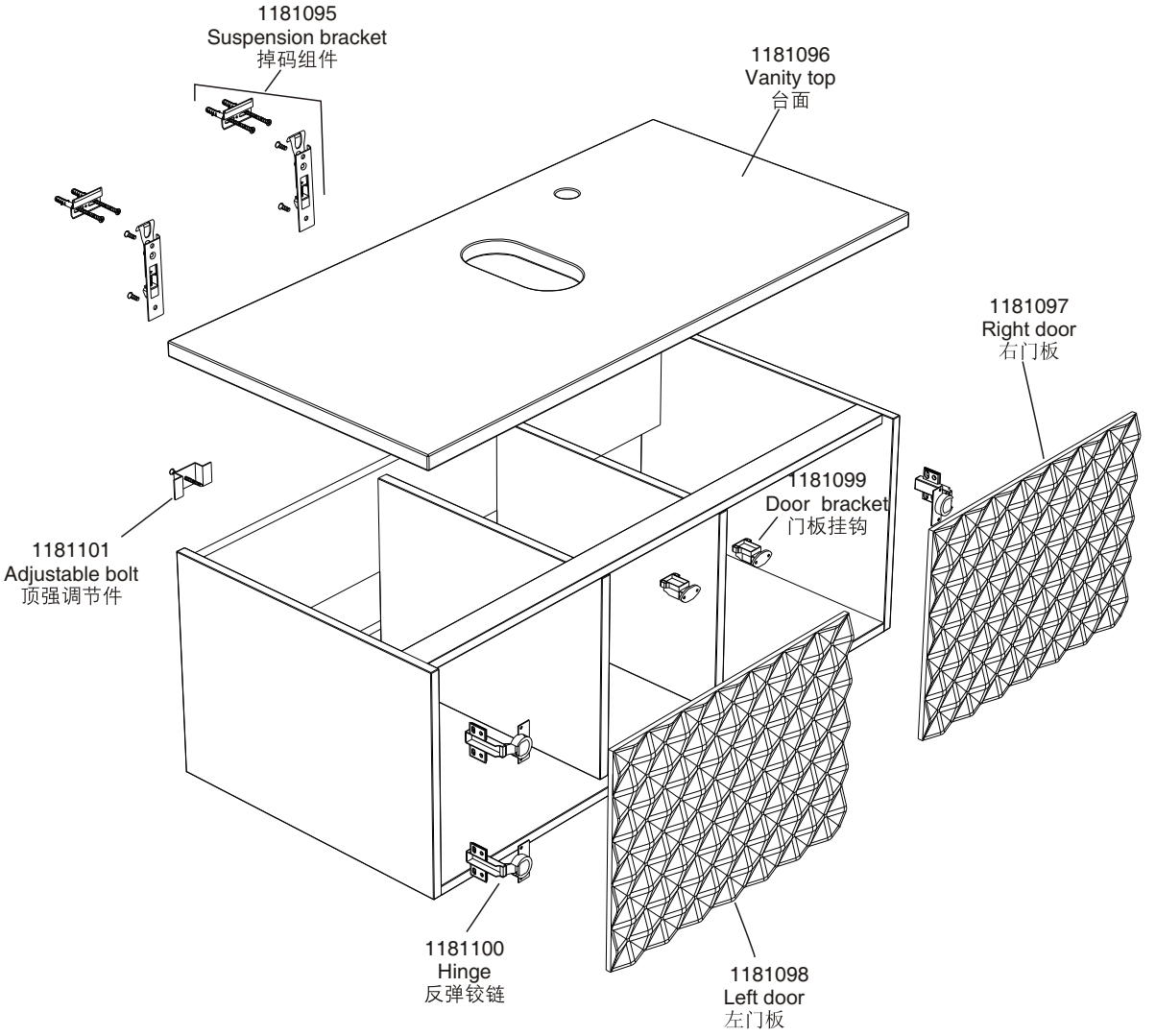

卡丽 KARAT®
安装说明书 INSTALLATION INSTRUCTIONS

VENUS WALL-HUNG WOODEN MIRROR CABINET
维纳斯挂墙式实木多层板镜柜
45548T-WF

BEFORE YOU BEGIN

Please read these instructions carefully to familiarize yourself with the required tools, materials, and installation sequences. Follow the sections that pertain to your particular installation. This will help you avoid costly mistakes. In addition to proper installation, read all operating and safety instructions.
All information in these instructions is based upon the latest product information available at the time of publication. Kohler China. reserves the right to make changes in product characteristics, packaging, or availability at any time without notice.
These instructions contain important care, cleaning, and warranty information-**please leave instructions for the consumer.**
Turn off the water supply.
The pluming installation must comply with Water Supply Regulations/Bye-laws, Building Regulations or any particular regulations and practices, specified by the local water company or water undertakers. The installation should be carried out by a plumber.
Before installation carefully inspect the new fixture for any signs of damage.

安装之前

请仔细详阅本指引，以便熟悉所需工具、物料及安装程序。请遵照适用的章节来安装本产品，以免安装失当导致不必要的损失。除了有关正确的安装方法之外，还务请详阅所有操作及安全指引。

本指引所载之一切资料，均以印刷时所有之最新产品情况为基础，卡丽保留权利随时更改产品特性、包装或供应情况，恕不另行通知。安装家具之前，请先确认所有必需的电气工作均已完成。

本指引也包含了有关保养、清洁及担保等重要资料-**请交予用户保存。**

关闭供水。
管道安装必须遵循当地所有给排水、建筑或者其他的特别规定。管道安装人员必须具备相应资格。

安装之前，仔细检查新产品是否有损伤。

SAFETY: WARNINGS

Karat products are precision-engineered and should give continued superior and safe performance, provided:

1. They are installed, commissioned, operated and maintained in accordance with the recommendations given in this Manual.

2. Periodic attention is given, as necessary, to maintain the product in good functional order. Recommended guidelines are given in the **MAINTENANCE** section.

Carefully inspect the new fixture for any signs of damage.

When installing Karat Products, manufacturers guidelines for power tool safety should be followed.

安全：警告

卡丽产品经过精确制造，性能卓越，经久耐用。为保证产品品质，您必须:

1. 按照此手册中推荐的方法进行安装、起动、操作及维护。

2. 如有需要，定期检查，令产品保持良好性能状态。**日常维护**章节中列有推荐方法。

仔细检查新产品是否有损伤。

在安装卡丽产品时，必须遵循制造商相关电动工具的安全的指令。

ROUGHING-IN

尺寸图

UNIT : mm
单位：毫米

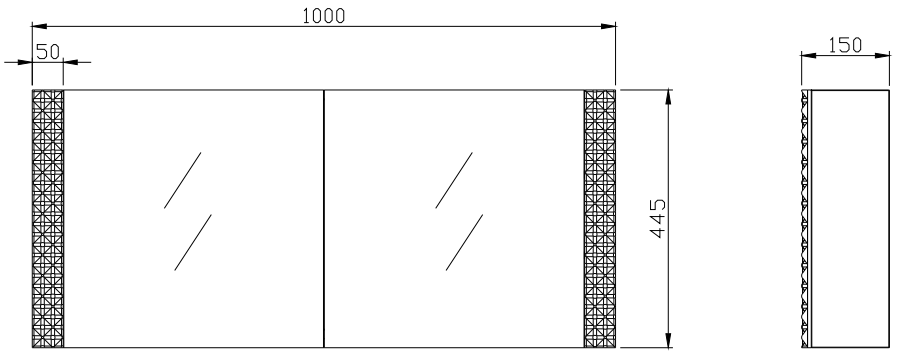

INSTALLATION 安装

INSTALL CABINET

1. Mark the position of cabinet according to dimensions as illustrated,

⚠ **Caution!** Avoid the cables and pipes inner set when drilling in the wall.

安装主柜

1. 根据图示,在墙壁上标示出挂墙安装孔的位置,

⚠ 小心！在墙壁上钻孔时请务必小心避开内设的缆线和管道。

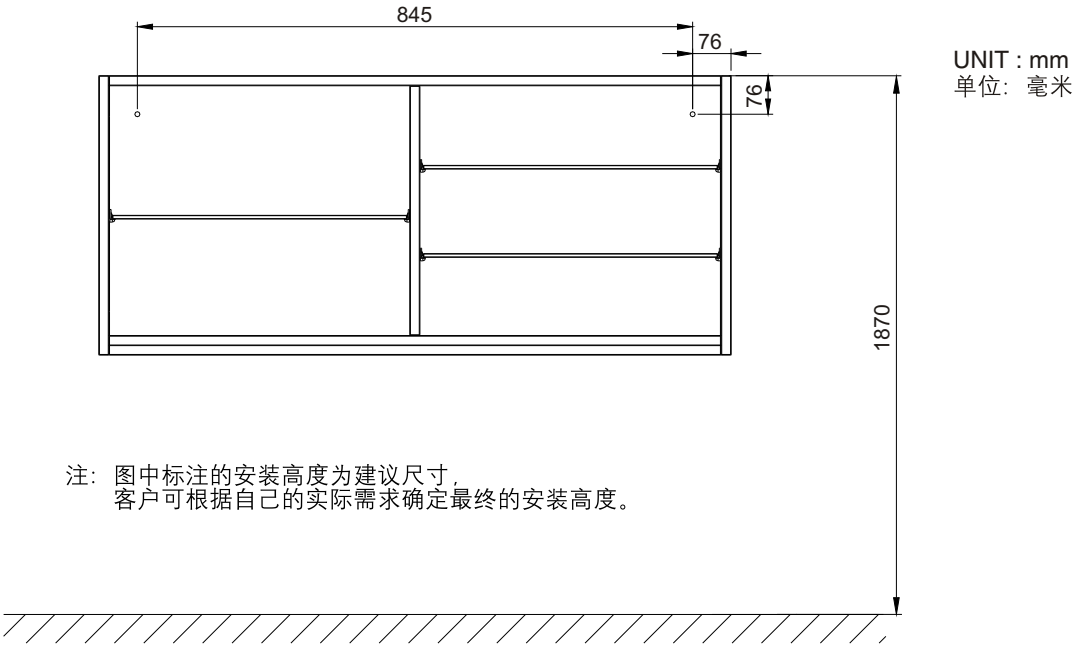

注: 图中标注的安装高度为建议尺寸,
客户可根据自己的实际需求确定最终的安装高度。

INSTALL MIRROR CABINET

6. Mark the wall through two holes at the corresponding positions as illustrated Fig 5.

7. Dismount the mirror cabinet and put aside. Drill holes at the marked position.

⚠ **Caution!** Avoid the cables and pipes inner set when drilling in the wall.

安装镜柜

6. 如图所示通过四个圆孔在墙壁上相应位置做记号。

7. 将镜柜取下放在一边，并在墙上记号处钻孔。

⚠ 小心！在墙壁上钻孔时请务必避开内设的缆线和管道。

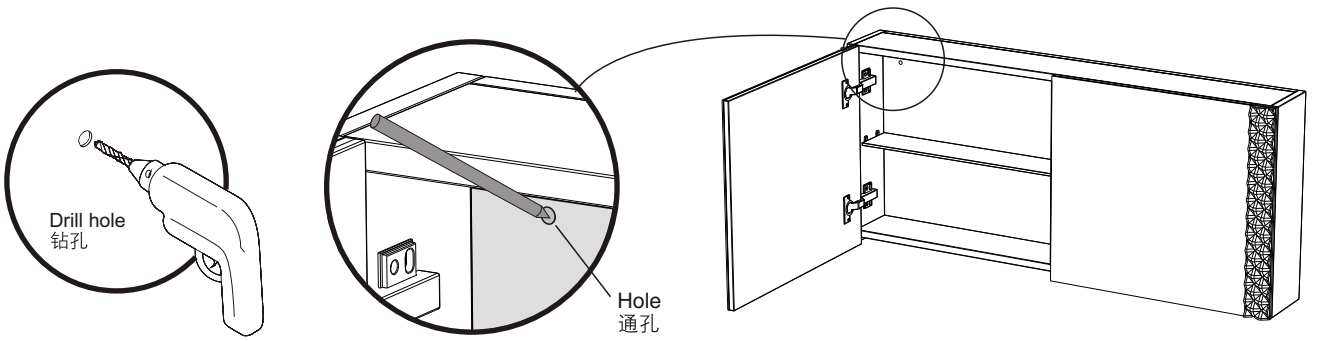

8. Insert the plugs into the wall.

9. Set the washbasin cabinet onto the brackets. Be sure the cabinet adjusted level and the back board of cabinet appressed to the wall by adjusting the screws of wall clips.

8. 将入墙胶塞打入墙壁。

9. 将侧柜放置到墙上，并确认将侧柜调节到水平状态，安装孔对准墙上的胶塞孔，用螺钉锁紧侧柜。

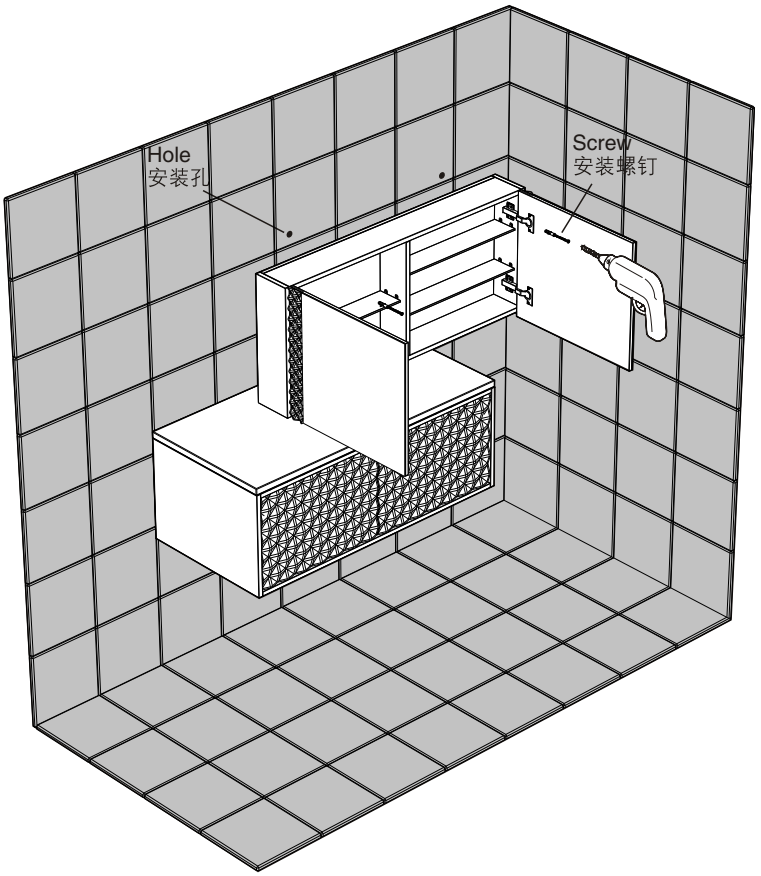

USER MAINTENANCE

⚠ **Warn! Risk of product damage.**

1. Many cleansers contain abrasive and chemical substance which is not suitable for cleaning stainless steel, enamel, plating or plastic products. You may use mild cleansers or soaps to clean the surfaces. Wipe any splashes of cleaner solutions from the surface with clean soft cloth.

2. Maintain ventilation in the bathroom, and separate the dry area from the damp one if conditions permit. Try to open the door and windows of the bathroom and maintain good ventilation.

3. Kohler bathroom cabinet are dealt with strict procedures for damp-proof, whose good damp-proof function ensures good performance even in bathroom of huge humidity. Yet do not splash and pour water directly on the bathroom cabinet. Make sure that the bathroom is not over damp and wipe any splashes from surfaces immediately.

日常维护

⚠ 警告！小心产品受损。

1. 许多清洁剂都含有研磨剂及化学物质，不可用于清洁不锈钢、搪瓷、镀层或塑料制品。这些表面须使用温和的清洁剂或皂液进行清洁，将残余洗涤剂洗干净，然后用干净的软布擦干。

2. 卫生间请保持良好的通风状态，有条件的可以干、湿分离，平常尽量保持浴室空气畅通，养成开窗开门的习惯。

3. 卡丽浴柜都经过严格的防潮处理，但防潮并不是防水，使用时不可随意任浴柜被水浇、溅。良好的防潮性能可以保证在高相对湿度时仍有良好使用性，所以请避免卫生间过于潮湿，遇有水迹要及时擦干。

4. Maintenance of door board: Clean and wipe door board regularly, and wipe the condensation vapor with dry and soft cloth.

5. Ensure that electrical connections for appliances such as head lamp is insulated wipe mirror surface with chamois regularly to guarantee the persistent excellent performance.

6. Please do not sit, lean or step on the basin cabinet.

4. 门板的保养：经常用软布定期清洁、擦拭，洗浴后的冷凝水蒸气应用干布擦净，保持门板的干爽。

5. 照明灯等电器连接要确保绝缘、防潮镜面最好用麂皮经常擦拭，可以保障使用质量经久如一。

6. 日常使用时，请勿坐、倚、靠、踩踏在脸盆柜上。

ONE -YEAR WARRANTY

Our company provides one year warranty for its cabinet free during normal residential use. Our company will be responsible any problens caused by manufacturing defects provided with the invoice. Our company will,at itselection ,repair ,replace or make appropriate adjustment where our company inspection discloses any such defects occurring in normal usage within warranty.

The warranty, including products, is limited clearly. Our company is not responsible for other damages appeared after the warranty. Also,the warranty dose not cover problems arising from labor charges,incorrect use and installation.

一年有限担保

本产品自购买之日起，我司将提供一年的质量担保，在质保期内，凭购货发票，我司将免费承担由制造质量引起的任何问题。经核查后，我司有权决定是修理、更改、还是做适当的调整。

这里的担保，包括产品都已明确地限制在该担保期内。本司对以后出现的损坏不负有任何责任。担保也不包括外观损伤，使用不当及未按说明书安装的损失。

Shanghai Kohler International Trade Co., Ltd.,
Address: Room324, 2 Xinlin Rd, Waigaoqiao Free Trade Zone, Shanghai
Tel: 021-26062000
Postcode: 200131

上海科勒国际贸易有限公司
地址：上海市外高桥保税区新灵路106号2号楼324室
电话：021-26062000
邮编：200131
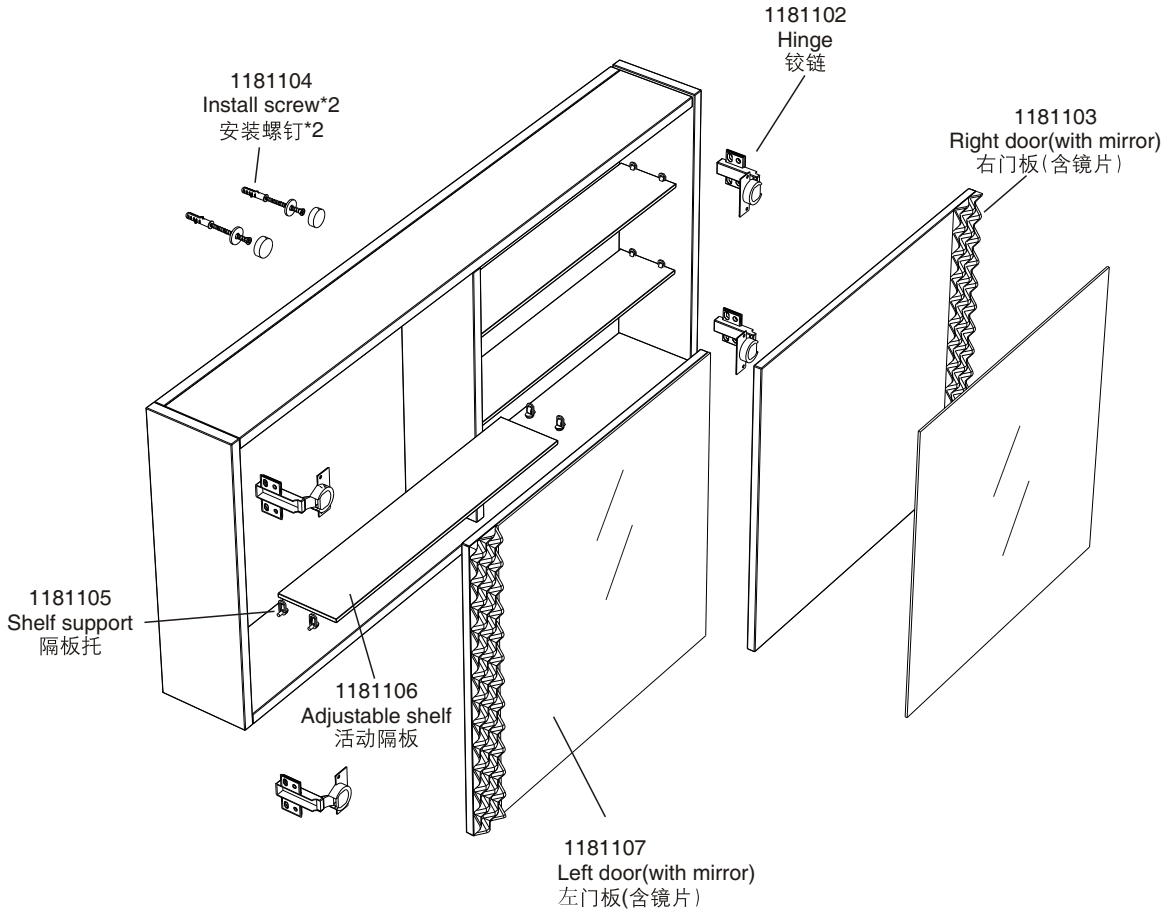
VENUS WALL-HUNG WOODEN MIRROR CABINET
维纳斯挂墙式实木多层板镜柜
45548T-WF