卡丽 KARAT®

安装说明书 INSTALLATION INSTRUCTIONS

PINE FREE-STANDING ACRYLIC BATHTUB,
WITH 5 FAUCET HOLES/WITHOUT FAUCET HOLE
派恩独立式压克力浴缸
五孔/无孔
97275T-WK/97276T-WK

BEFORE YOU BEGIN

Please read these instructions carefully to familiarize yourself with the required tools, materials, and installation sequences. Follow the sections that pertain to your particular installation. This will help you avoid costly mistakes. In addition to proper installation, read all operating and safety instructions.
All information is based on the latest product information available at the time of publication.
Our company reserves the right to make changes in product characteristics, packaging, or availability at any time without notice.
These instructions contain important care, cleaning, and warranty information-please leave these instructions for the consumer.

安装之前

请仔细阅读此说明书以熟悉所需要的工具、材料及安装顺序。遵循适合您的特定安装要求的各项内容，避免昂贵的损失。除了要正确安装外，还应阅读操作及安全说明。

所有的资料是按最新出版的产品资料编写而成。我公司保留任何时候无须通知即可改变产品特性、包装或产品可供类型的权利。

说明书包括重要的安装、清洁及保养方面的内容，请把这些资料交给用户阅读。

PRODUCT REQUIREMENTS

A. Product Requirements

Observe all local plumbing codes.
Install the unit to a level subfloor.
Provide properly-dimensioned framing.

B. Product Inspection

Uncrate and inspect bath for damage. Leave all materials in carton during construction to prevent damage.

C. Clearance Requirements

Check the rough-in and room dimensions to provide adequate available space for the bath unit.

D. New or Replacement Installation Requirements

This bath can be installed in new or existing bathrooms.
For replacement: Remove the old bath, and remove enough old wall material and floor covering from the area to allow for installation. Remove any old plumbing that does not conform to the rough-in requirements.
For new installation: Position the plumbing according to the rough-in dimensions. Cap the suppliers, and check for leaks.

产品要求

A. 关键要求的总结

请遵守当地的卫生管道施工规范。
在水平的底层地板上安装浴缸。
提供适当尺寸的结构。

B. 产品检查

打开包装箱并检查浴缸是否损坏。施工期间将所有的材料都留在箱内，以防止损坏。

C. 预留尺寸

检查安装尺寸及浴室尺寸，确保有充分的空间安装浴缸。

D. 安装新浴缸或旧浴缸要求

无论新的和旧的浴室本产品均适合安装。
更换旧浴缸：搬去旧浴缸，清除所有旧墙材料和地板贴面以便于安装。拆除任何不配新浴缸尺寸的旧管道。

安装新浴缸：按安装尺寸图铺设管道。堵塞供水管，并检查渗漏。

ROUGHING-IN 安装尺寸

A.Ordering Information:

Hardware:		
Bathtub drain	1240308	Included
Drain tube	1240309	Included

A.订购信息:

配件：		
浴缸去水	1240308	配带
浴缸去水接管	1240309	配带

B.Installation Note:

Read the entire installation instructions included with fixture before beginning the installation.

B.安装须知:

安装之前请仔细阅读说明书的所有步骤。

C.Roughing-in:

C.尺寸图 :

UNIT: mm
单位 mm

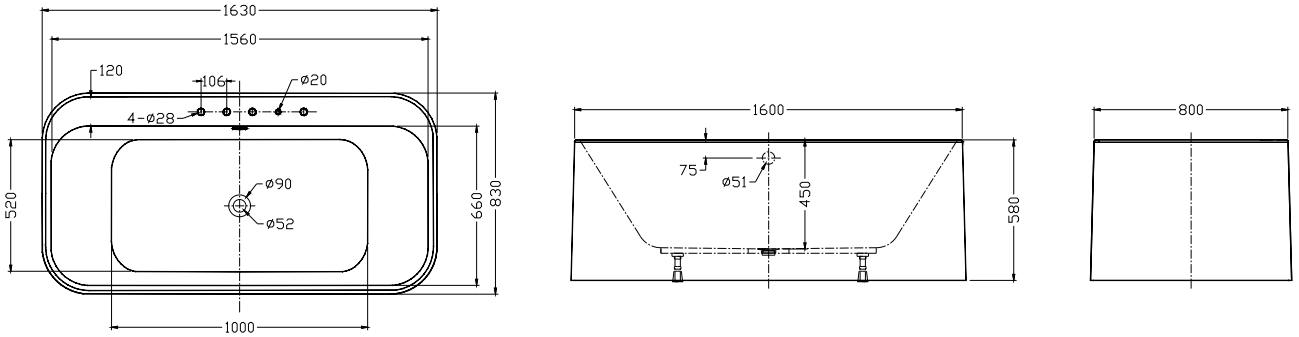

INSTALLATION REQUIREMENTS 安装要求

A. Tools Required

Adjustable pipe wrench
Rule
Level
Safety shoes
Safety glasses
Square
Pliers
Utility knife

B. Materials Required

Plumbers putty
Wall coverings, as necessary
Silicone sealant
Gypsum ciment (optional)
Construction adhesive (optional)
Protective covering for bathtub
Nails

A. 所需工具

管道扳手
刻度尺
水平仪
安全鞋
安全眼镜
直角尺
钳子
多用工具刀

B. 所需材料

管道用油灰
墙面保护罩(如需要)
密封硅胶
石灰水泥(选用)
建筑粘胶(选用)
浴缸保护套
钉子

SITE REQUIREMENTS 安装场所要求

A. Old Bath Removal

Disconnect the drain at the trap. Remove the old wall material. Slip boards under the old bath feet to protect the floor, and slide the old bath out of the recess as illustrated.

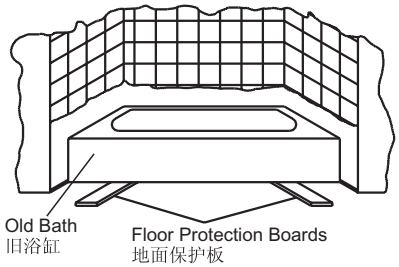

A. 拆除旧浴缸

在存水弯处拆下排水管。清除所有旧墙材料。**在旧浴缸下面塞入护板以保护地面**，并按如图所示把旧浴缸从安装空间拉出。

B. Subfloor Preparation

Check the flooring under the bath, and make repairs as needed. Make sure the subfloor is level.

B. 底层地板的准备

检查浴缸下的地板，若需要请进行修补。请确保底层地板水平。

C. Plumbing Preparation

Position the plumbing according to rough-in dimensions. Cap the supplies and check for leaks.

C. 管道的准备

将管道按安装尺寸安置，堵塞供水管并检查是否漏水。

BEFORE INSTALLING UNIT 安装浴缸之前

A. Your new bathtub has been manufactured to the highest possible standards, it has been factory tested and approved.

A. 本浴缸质量上乘，已经工厂检测通过。

B. When removing bath from protective carton DO NOT LIFT BATH BY PIPE WORK . Inspect for any possible damage that may have occurred in transit.

B. 从起保护作用的纸箱中取出时，**请不要拎着管道部分将浴缸取出**。检查可能有搬运造成的损伤。

C. IMPORTANT: Bath must be instaued level on all top Edges.

C. 注意：浴缸必须水平地放置。

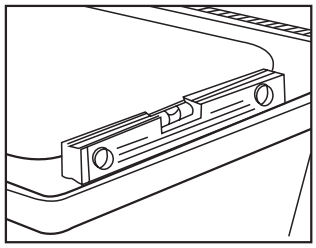

D. Protect the Bath Unit

Position a protective covering or similar material in the bottom of the unit. Be careful not to scratch the bath Surface.

D. 保护浴缸

在浴缸表面盖上保护套或类似的材料，小心不要划伤浴缸表面。

INSTALL THE BATH 安装浴缸

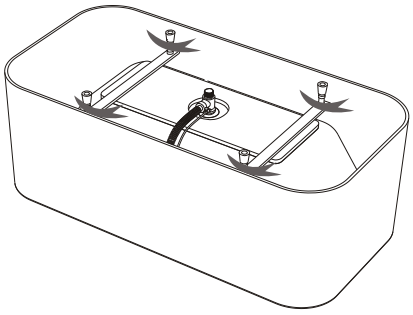

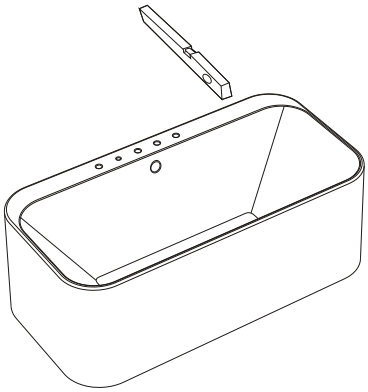

1 Adjust food height
调节各支撑脚的高度

2 Levelling
校平

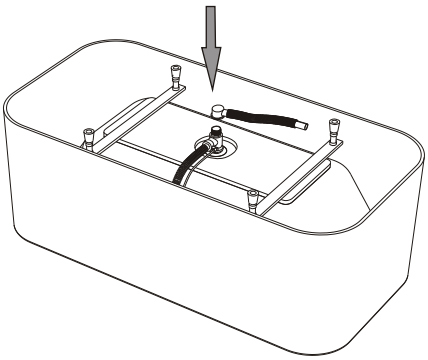

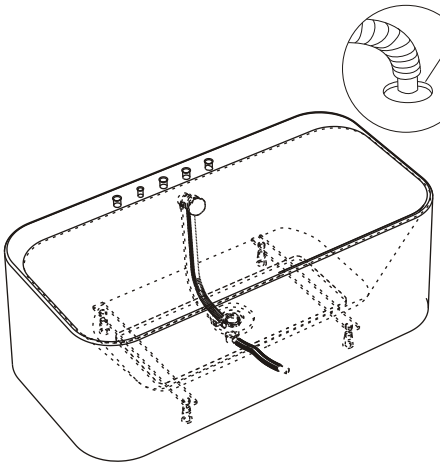

3 Connect the pipe to the connectioin of drain
将去水软管安装到浴缸的去水接头上,缠上生料带。

4 When the bath is secursly positioned,Connect the drain to the drain system
当浴缸固定到位后，将去水软管与地面排水口连接

CAUTION: Risk of damage to bath bottom and subfloor. Ensure a watertight seal on the bath drain connections.

1). Install the faucet valving and spout tee. Open the hot and cold water valves, and check the supply connections for leaks.

2). Run water into the bath, and check the drain connections for leaks.

注意：避免损坏浴缸底部和底层地板。浴缸的所有排水接口都要确保做防渗密封。

1). 安装水龙头阀门及喷头三通。打开冷水及热水阀门，检查所有给水管接头是否有渗漏。

2). 让水流入浴缸，检查排水配件接头是否有渗漏。

CLEAN-UP AFTER INSTALLATION 完工清理

When cleaning up after installation, do not use abrasive cleansers as they may scratch and dull the surface. Use warm water and liquid, non-abrasive detergent to clean the surface.

在安装完成后进行清理时，请勿使用磨损性的清洁用具，以免擦伤浴缸表面，使其失去光泽。使用温水和非腐蚀性的液体清洁剂，清洗浴缸表面。

Stubborn stains, paint, or tar can be removed with mineral spirits. Do not use cleaners containing solvent. Plaster can be removed by scraping with wood edge. Do not use metal scrapers, wire brushes, or other metal tools. One of the powder type detergents may be used on a damp cloth to provide mild abrasive action to the residual plaster.

难以清除的污迹、油漆、或柏油，可用酒精擦净。请不要让含有溶剂的清洁剂。滞留水泥可用薄木刀刮掉。请不要使用金属刮刀，钢丝刷，或其它金属工具。对残留的水泥浆，可用湿布粘些洗衣粉，以提供轻微的研磨作用。

IMPORTANT CONSUMER INFORMATION

重要的用户资料

A. Consumer Responsibilities

Cleaning Acrylic Surfaces: Do not use abrasive cleansers on any acrylic surfaces, as they will scratch and dull the surface. Wipe out the bath after each use to prevent a build-up of soap and scum.

If the acrylic surface becomes dull, an automotive type rubbing compound *may be used on the unit, followed by an application of paste wax.

*We recommended:
Rubbing compound mequiars mirror glaze 28 metal polish (import product) or "green oil".

A. 用户的责任

清洗压克力表面：请勿在压克力表面使用磨损性的清洁用具，以免擦伤浴缸表面，使其失去光泽。每次使用后，将浴缸擦干，以防止肥皂和污垢沉积。

若压克力表面失去光泽，先用汽车抛光剂*，然后再用粗腊打亮。

*我们推荐使用以下2种抛光剂：
① Mequiars 镜面光亮28金属上光剂。(进口)
② 抛光膏(绿油)。

LIMITED ONE-YEAR WARRANTY

一年有限担保

This product is warranted for one year from date of purchase. Our company will be responsible for any problems caused by manufacturing defects provided with the invoice. our company will, at its election, repair, replace or make appropriate Adjustment where Our company inspection discloses any such defects occurring in normal usage within one year after purchase.

Implied warranties including that of merchantability and fitness for a particular purpose are expressly limited in Duration to the duration of this warranty,our company disclaims any liability for special, incidental or consequential damages. Damages to the product caused by misuse, abuse and installation that is not in accordance with the owner's manual are not covered by this warranty.

本产品自购买之日起即获得我公司一年的质量保证。在质保期内，凭购货发票，我公司将免费承担由制造质量引起的任何问题。经核查后，我公司有权决定是修理、更换、还是作适当的调整。

这里所指的担保，包括产品，都已明确地限制在该担保期之内。我公司对其后出现的损坏不负有任何责任。担保也不包括外观损伤、使用不当以及未按说明书安装的损失。

Shanghai Kohler International Trade Co., Ltd.,
Address: Room 324, 2 Xinlin Rd,
Waigaoqiao Free Trade Zone, Shanghai
Tel: 021-26062000
Postcode: 200131

上海科勒国际贸易有限公司
地址：上海市外高桥保税区新灵路106号2号楼324室
电话：021-26062000
邮编：200131
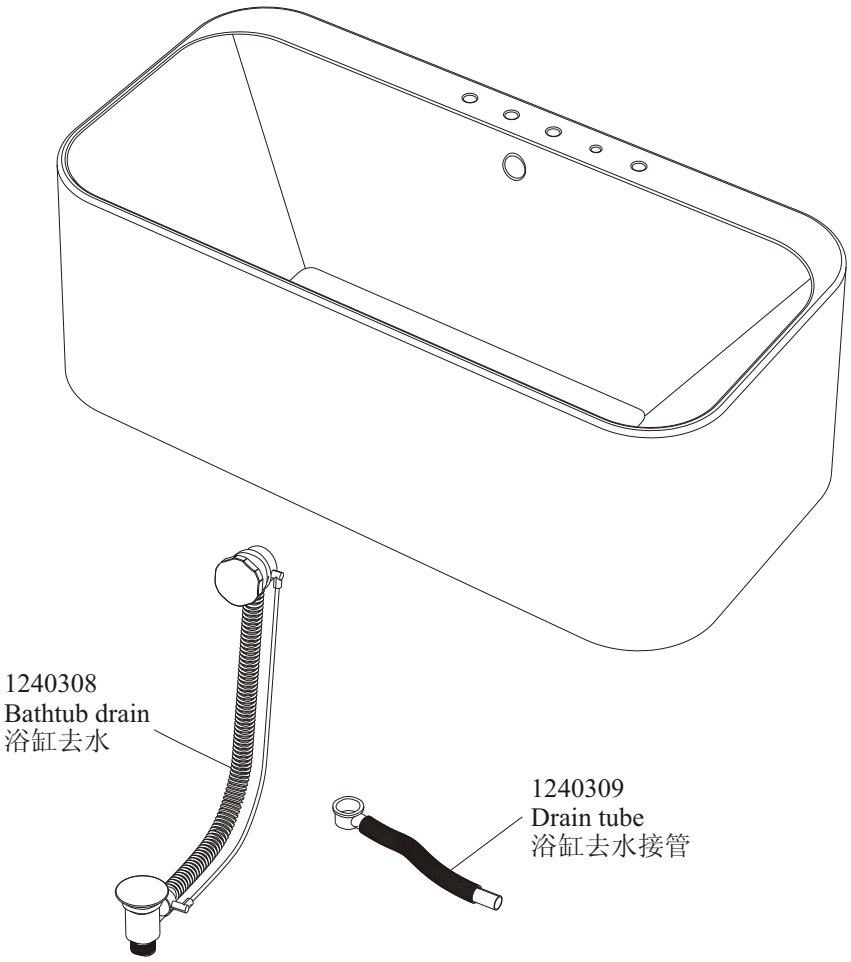
PINE FREE-STANDING ACRYLIC BATHTUB,
WITH 5 FAUCET HOLES/WITHOUT FAUCET HOLE
派恩独立式压克力浴缸
五孔/无孔
97275T-WK/97276T-WK