卡丽 KARAT®

安装说明书 INSTALLATION INSTRUCTIONS

DIAMOND INTEGRATED TOILET
璀璨智能一体化坐便器
45886T-WK

BEFORE YOU BEGIN 安装之前

- Please read these instructions carefully to familiarize yourself with the required tools, materials, and installation sequences. Follow the sections that pertain to your particular installation. This will help you avoid costly mistakes. In addition to proper installation, read all operating and safety instructions.
- All information in these instructions is based upon the latest product information available at the time of publication.
- These instructions contain important care, cleaning, and warranty information-**Please leave instructions for the consumer.**
- Obey all electrical regulations in force at the time of installation.

  ⚠**Warning! Risk of personal injury and product damage.** Toilet are very heavy and should not be lifted or installed by just one person.
- 请仔细详阅本指引，以便熟悉所需工具、物料及安装程序。请遵照适用的章节来安装本产品，以免安装失当导致不必要的损失。除了有关正确的安装方法之外，还务请详阅所有操作及安全指引。
- 本指引所载之一切资料，均以印刷时所有之最新产品情况为基础。
- 本指引也包含了有关保养、清洁及担保等重要资料-**请交予用户保存。**
- 遵循当地所有的电器安装规定。

  ⚠**警告! 小心人身伤害和产品受损**。马桶 较重，安装时请勿一人操作。

SAFETY: WARNINGS

Products are precision engineered and should give continued superior and safe performance, provided:
1. They are installed, commissioned, operated and maintained in accordance with the recommendations given in this Manual.
2. Periodic attention is given, as necessary, to maintain the product in good functional order. Recommended guidelines are given in the **MAINTENANCE** section.

Carefully inspect the new fixture for any signs of damage.
When installing Products, manufacturers guidelines for power tool safety should be followed.

安全：警告

产品经过精确制造，性能卓越，经久耐用。为保证产品品质，您必须：
1. 按照此手册中推荐的方法进行安装、起动、操作及维护。
2. 如有需要，定期检查，令产品保持良好性能状态。日常维护章节中列有推荐方法。

仔细检查新产品是否有损伤。
在安装产品时，必须遵循制造商有关电动工具的安全指令。

TOOLS AND MATERIALS 工具及材料

Pencil	铅笔
Measuring Tape	卷尺
Level	水平尺
Miter Box	钻子箱
Safety Glasses	安全眼镜
Drill	手枪钻
Screwdrivers	螺丝刀
Hole Saw	孔锯

INSTRUCTION 产品简介

The automatic toilet seat with the functions of washing automatically drying seat heating .automatically cleaning .lambency lighting .wetting etc.The water temperature .air temperature .seat temperature and water pressure can be adjusted per your requirements .The nozzle can move forward and backward ,also with the massage function by reciprocating moving.

本产品具有恒温无限畅洗、自动烘干、自动除臭、喷头自洁、座圈加热、自动冲水、柔光照明等功能。
水温、风温，座圈温度以及水压可根据需要进行调节。冲洗杆位置可作前、后调整，还可进行往复移动式冲洗。

MAIN SPECIFICATIONS 主要技术指标

型号	45886T-WK
电源	AC220V 50HZ
额定输入功率	1650W
电源线长度	1.5m
安全装置	漏电保护动作电流15mA
进水方式	自来水直进

Model	45886T-WK
Voltage	AC220V 50HZ
Rated input power	1650W
Length of supply cord	1.5M
Safty device	leakage protection 15mA
Water input mode	Tap water directly

适用水压	0.15~0.75MPa
使用环境温度	室温
外形尺寸	721mm×417mm×568mm

Applicable water pressure	0.15-0.75mpa
Ambient temperature	Room temperature
Dimension	721mm×417mm×568mm

洗净装置	
冲洗水量	0.5~0.75L/min
电热功率	1600W
冲洗水温	室温~40°c
安全装置	水温采用双重控制 电热管防干烧保护

washing settings	
Rinse rate	0.5~0.75L/min
Heater power	1600W
Water temperature	Room temperature to 40°c
Safety device	Dual control water temperature Anti-dry protection

干燥装置	
风量	4m/s
电热最大功率	220W
温风调节	室温～60°c
安全装置	双重热保护95°c~150°c

Air drying settings	
Air capacity	4m/s
Max.power	220W
Air temperature	Room temperature to 60°c
safety device	Dual Temperature fuse protection: 95°c~150°c

便座	
电热功率	45W
表面温度	室温～40°c
开闭装置	带缓降器
安全装置	电热保护77°c

seat	
Seat heater power	45W
Surface temperature	Room temperature to40°c
Open-close device	Damping system
Safety device	Temperature fuse 77°c

安全注意事项

为了避免对您和他人造成伤害和财产损失, 请您务必遵守如下有关安全方面的注意事项:

■无视如下警示, 因错误的使用方法而产生的危害分为两级

⚠ 警告 | 违反警告事项时, 可能会造成人的死亡或重伤。

⚠ 注意 | 违反注意事项时，可能会造成人的伤害或物质的损失。

	本产品电源要求为交流 **220V/50Hz**, 请确保电源与本机额定电压相符合，保证三芯插座内有可靠的接地。以免触电或损坏产品。
	儿童应在成人监护下使用，避免让儿童单独接触产品。在老人、小孩、身体障碍者、极度疲劳者、醉酒者、皮肤病患者或皮肤敏感者使用时，或长时间使用时，请把各种功能的温度调到较低档，以免烫伤。
	请勿使用和插头配合松动的电源插座。请勿将本体和插头放到水里或淋水（或其他液体），请勿在过于潮湿的环境使用，以免造成触电或火灾。电源出现故障时请立即拔下电源插头并联系维修服务。
	严禁自行拆卸，修理或改造产品。以免造成触电、火灾、漏水或机器的其他故障。
	请确保使用的水源是干净的，请勿放入芳香剂。
	严禁踩踏机器本体及座盖，严禁把加热器或重物放在机器本体、座盖、电源线上，以免造成触电或其他伤害和损坏。
	电源插座请务必连接地线。以免发生故障时，有触电的危险。
	有可能冻结的时候，请放掉进水软管的水。
	请定期清扫电源插头上的灰尘。清扫时，将电源插头拔下，干布擦拭。长期不用时，请将进水软管中的水放掉。

⊘	◎请勿将香烟等火种接近产品。 ◎请勿将重物放在及人站在产品上。 ◎请勿撞击产品。 ◎请勿用手指或其它物品放入或堵塞暖风口。 ◎请勿将进水管扭曲、破损。 ◎请勿用座便器冲洗除大、小便及手纸以外的东西。 ◎清洁时请用柔软的湿布擦拭外壳，不要使用任何有机溶剂。 ◎请不要用湿手拨插电源插头。 ◎请勿拉扯插头电线。 ◎请勿将产品翻转使用，否则会损坏产品。 ◎请勿磨损遥控器接收口及感应窗口的外表面，请勿用其它物品挡住遥控器接收口、感应器窗口。
!	◎在打雷时，请将电源插头拔掉。 ◎长期不用时，请将水、电路切断。 ◎请不要把取暖器或暖炉等靠近本体，否则会导致本体变形、变色。 ◎防止日光直接照射，否则会引起塑料变色。

电源要求

本产品电源要求为交流50/60Hz，220V±10%，10A，
插座采用Y形连接。右图中L表示火线，N表示零线，
⏚ 表示地线

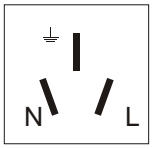

220V插座

◎请确保接地线接地良好，且接地线不能作其它用途，以免触电。
◎请确保插座及电线可以负荷10A的电流，建议不要和其他电器共用一个插座。
◎请勿使用损伤的电源线及插头。
◎请勿使用和电源插头配合松动的电源插座。
◎请确保电源插座、插头干燥，禁止淋水。

SAFETY NOTICE

Please read this instruction carefully before use.
The notice following has very important relationship with safety, please do it.

WARNING

	This product requires AC power of 220V.50Hz. To avoid damaging the product , please confirm whether the supply power accord with the rated voltaged of toilet seat. Make sure the three core socket with reliable earthing inside.
	Children should be supervised by adults to ensure that they do not play with the product. When the elderly, children, physical disabilities, persons who extreme tired, alcoholics, patients with skin diseases or skin sensitive to use, or use with long time, please bring a variety of functions transferred to the low level to avoid scalding.
	Please don't use this power socket which matchs not perfectly with plug. It is forbidden that put the toilet seat and plug into water or water spray(or other liquid). To avoid electric shock or fire, please don't use it under humid environment.
	To avoid electric shock, fire, water leakage and other causes, disassembly the toilet seat by yourself or require the product or reshape the product is forbidden.
	Make sure the water you use is clear, to avoid health troubles, please don't put any air freshener.
	It is strictly forbidden to stamp the toilet seat and seat cover. To avoid electric shock or other injury and damage, don't put heater machine or weight things onto toilet seat 、seat cover 、power line .

	◎Cigarettes and other fires should be taken away from this product. ◎It is strictly forbidden to stamp the product or stand on it. ◎Do not knock the product. ◎Please keep the warm-air mouth fluently. ◎Keep water-inlet hose not been bent and damaged. ◎Please use soft wet-clothing wipe the surface of toilet seat instead of any organic impregnant. ◎Do not take off the plug when your hand is wet. ◎Do not force pull the plug wire. ◎Please do not use this product upturn, otherwise it will be damaged.
	◎Please take off the plug when there is thunder. ◎Please cut down the water supply and power supply when it is not use for long time. ◎Please take heater away from this product, otherwise it will deformation or color distortion. ◎Sunshine is not allowed !

功能一览表

臀部清洗	便后自动清洗臀部，无需厕纸，对痔疮、肛门炎患者具有很好的物理治疗效果。
女士专用清洗	在原有臀部清洗的基础上，增加了女性专用清洗功能，满足了女性的特殊需要，既卫生又方便。
往复移动清洗	清洗时，喷嘴还可以进行前后往复移动式清洗，扩大了清洗范围，增强了清洗效果。
暖风	洗过的臀部会用可调节的暖风吹过以后，使您干净、爽洁，倍感呵护。
阻尼缓降	利用物理阻尼原理设计的缓冲装置，可安静的关闭座圈、座盖。
座圈加热	微电脑控制的座圈在使用中可根据需要调节温度。
自动除臭	采用高科技除臭滤芯，及时有效的清除马桶内异味，使正在使用和下次使用的人免受异味带来的不适。
自动冲水	采用人性化设计，在您便后离开后，会对马桶进行自动冲水，无需手动操作。
着座开关	着座开关属于皮肤感应。在人体着座后清洗和烘干功能才能启动，否则就不能启动。
按摩功能	清洗水温有节奏的变化，起到按摩作用，促进血液循环。
柔光照明	温柔的灯光，给您夜间如厕带来方便，即给您指明了方向，又不会消除您的浓浓睡意。
喷口清洗	喷口可进行自动清洗，方便又快捷。
E键功能	按下E键，进入清洗、暖风自动模式，所有功能一键轻松搞定。
智能遥控	所有功能均可通过遥控器来操作。遥控器上采用液晶显示，所有功能的运行情况一目了然，即直观又方便。
无限畅洗	摒弃传统的水箱式，采用最新的即热式的加热方式，24小时随时加热，无限畅洗，方便、快捷、舒适、节能。

MAIN SPECIFICATIONS

Rear clearning	Washing the bottoms automatically after releasing yourself, without any toilet papers. The product has a good physical therapy for patients who suffer from hemorrhoids and anus inflammation.
Front clearning	Except the rear cleaning, another nozzle is added front cleaning. It satisfies the women's special requirement, hygienically and conveniently.
Cycling	the wand will move back and forth during the cleasing if “cycling”is pressed.the maximum moving distance is 15mm
Dryer	There are low(36°C),high(40°C) and normal three temperature level of the air temperature.During the air drying,the drying and washing functions can be exchanged.
Seat temp	The temperature of toilet seat controlled by microcomputer can be changed freely in use.
Water temp	The water temperature can be controlled by youself when you used .
Damping buffer	The damping system is designed by physical buffer theory for quietly open and close the cover and seat.
Automatic deodorization	Using high-tech deodorization filters, timely and effectively remove toilet smell, make are using and next time Those who use it from peculiar smell brings is unwell
Automatic flush	Using humanized design, on your left, the toilet on closestool automatically flush, without hands Dynamic operation.
Induction switch	Switch belong to skin induction. In the human body after sit down cleaning and drying function to activate, otherwise Can't start.
Massage function	Water temperature rhythmic change, play the massage effect, promote the blood circulation.
Automatic cleaning	Flush tube automatic cleaning, convenient and quick.
E-key	Press E key, enter cleaning drying automatic mode, all function one button easily calm.
Intelligent remote	All functions are controlled by remote control to operate. The remote control is used on liquid crystal display (LCD), all of the function Operation at a glance, namely the intuitive and convenient.
Fast heat	Discard the traditional water tank type, using the latest i.e. thermal type heating mode, 24 hour at any time heating, Infinite chang wash, convenient, quick, comfortable, energy-saving.

ROUGHING-IN **尺寸图**

UNIT:mm
单位：毫米

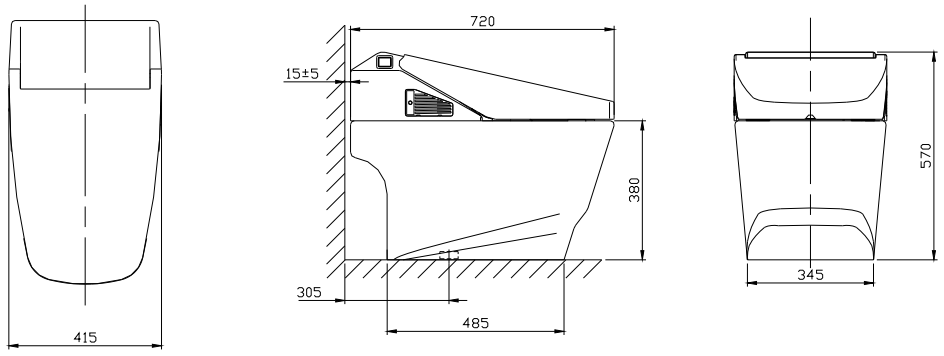

MANNUL示意图

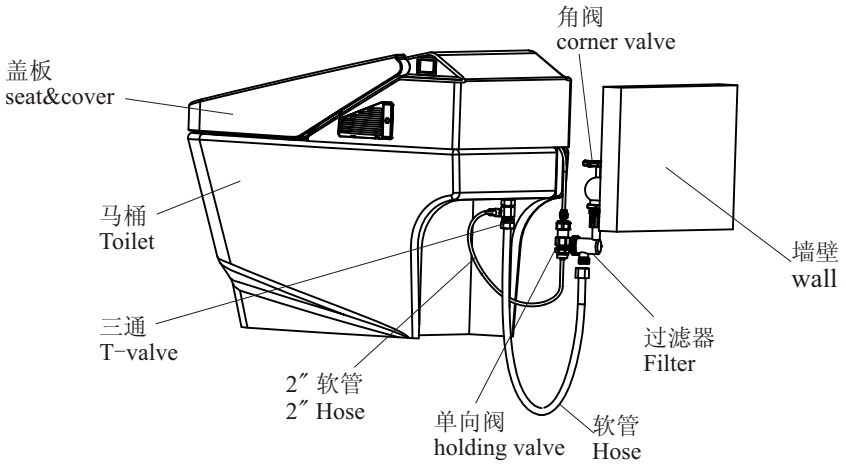

INSTALLATION 安装

1,Draw a cross-shaped line between the floor hose and the toilet seat' limber hole

Note:
1) To assort with the limber hole of the toilet seat,the drainpipe should be 5~15mm higher than the floor.
2) Installed with high coagulated material(grout) is strictly forbidden.As the cement's swell may damage the bottom of the toilet seat.Our company is not responsible for such damage.
3) The distance between the center of the drainpipe and the wall must be over 305mm.

1, 在地面水管和坐便器排污口划好十字中心线。

注意：
1）排水管应高出地面5~15㎜以便座便器排污口良好配合。
2）本产品禁止用高凝材料（水泥砂浆）安装，因为水泥膨胀可能挤破座便器底部。我公司因水泥安装而导致座便器破裂恕不负责。
3）排水管的中心离墙壁必须在305㎜以上。

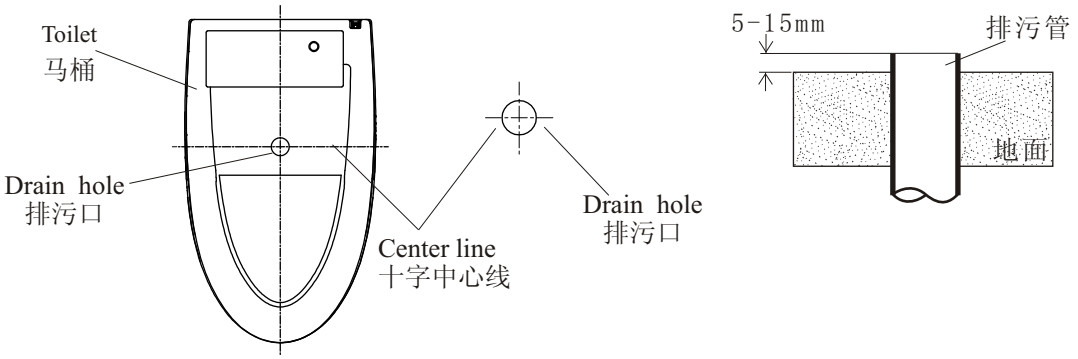

2.use a pencil to trace out the position of the installation hole and Drill holes..
2,将坐便器的排污孔对准地面排污孔，用笔描出安装孔位置,根据铅笔的标记用电钻在地面钻孔。

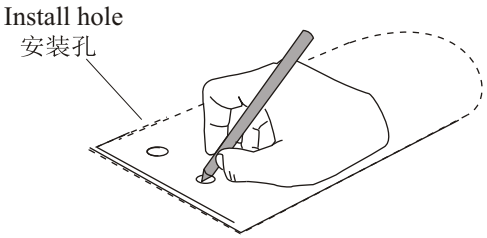

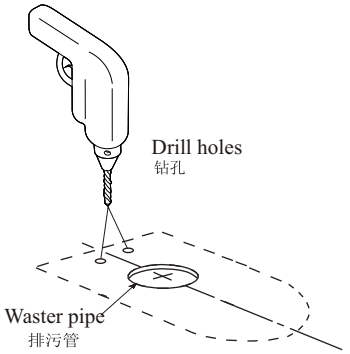

3.Remove the toilet seat,drill as the marked line,then install the colloid.
Note: To avoid the sundries filling the drainpipe,please fill the pipe with newspaper or rag first.
3，移走坐便器，按标记钻孔，装上胶粒。
注意：为防止杂物跌落排水管，先用报纸或碎布塞住水管口再钻孔

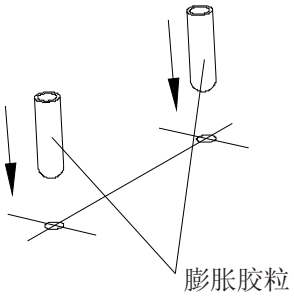

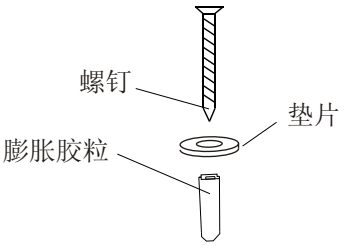

4.Fetch the sundries out of the drainpipe,make sure the pipe is fluent totally.Then put up the seat to make sure the cross-shaped line consistant with the floor,be sure that center or the pipe is accordance with the center point of the drainage.Pull it down to tight it till the toilet seat is firmly installed.
Note: After firming the toilet seat,no lifting or shaking any more.If the waterproof function of the sealing washer is damaged,please replace it with a new one.
4,将排水管的堵物取出，确保排水管干净。然后抬起座便器，使座便器的十字中心线现地面上的对齐，确保排污品中心与排水管中心对正，然后向下压紧，直至座便器平稳，用膨胀螺钉锁紧座便器。
注意：放好坐便器后，不可再提起或摇晃；若密封圈的防水攻能受到破坏，必须更换新的封圈。

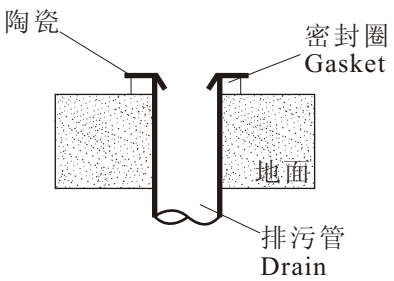

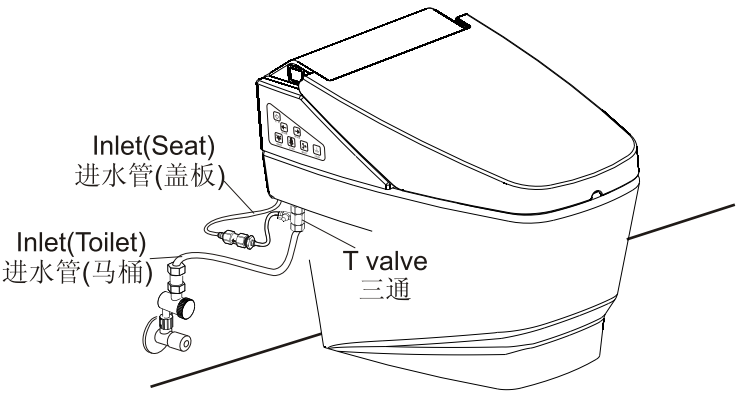

5.Install the water inlet angle valve,connect the water pipe,water inlet hose and filter .Then turn on to check if there is leaking phenomenon.If everything is in normal,put the sealing glue between the toilet seat and floor.
5,安装供水管角向阀，连接水管，进水软管和过滤器，并开启检查连接点是否有漏水现像，在一切正常的情况下，在座便器与地面接触面上打上密封胶。

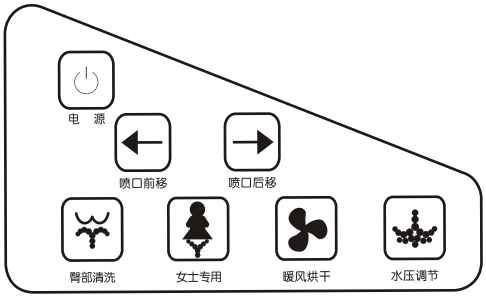

电源

After finishing the installation, turn on the water supply angel valve first, then connect the plug, press "POWER".
产品安装完毕后，先打开供水角阀，再打开电源，电源指示灯亮。

臀部清洗

Press "REAR CLEANSING", the spray pole will wash itself automatically first, then it will start to work when it sprays out. Renew the key to stop working. "REAR CLEANSING" and "FRONT CLEANSING" can be exchanged in the washing, the time is about 4 seconds.
按"臀部清洗"键进行臀部清洗，再按一次停止。"臀部清洗"键与"女士专用"键可以互相转换，转换时间约4秒。清洗时，冲洗杆在伸缩过程中有水流渗出，用来清洗喷头，属正常现象。

女士专用

Press "FRONT CLEANSING", the spray pole will wash itself automatically first, then it will start to work when it sprays out. "REAR CLEANSING" and "FRONT CLEANSING" can be exchanged in the washing, the time is about 4 seconds.
按"女士专用"键进行女士清洗，再按一次停止。"女士专用"键与"臀部清洗"键可以互相转换，转换时间约4秒。清洗时，冲洗杆在伸缩过程中有水流渗出，用来清洗喷头，属正常现象。

暖风

The dry temperature can be adjusted according to your requirement: low, medium, high.
按此键可设定暖风温度，暖风温度分为低、高、常温三档。在暖风过程中，"暖风"键与"臀部清洗"键和"女士专用"键互锁。清洗完按暖风键可自动冲水。

座温

The seat temperature can be adjusted according to your requirement: close(normal temperature), low(34°C), medium(38°C), high(40°C). If nobody on the seat, the "REAR CLEANSING" & "FRONT CLEANSING" functions can't work.
循环按"座温"键对座圈温度进行调节。座圈温度分为四档：低温（34℃）、中温（37℃）、高温（40℃）、关（常温）。

水温

The water temperature can be adjusted according to your requirement: close(normal temperature), low(34°C), medium (38°C), high(40°C).
循环按"水温"键对清洗水温进行调节。水温分为四档：低温（34℃）、中温（37℃）、高温（40℃）、关（常温）。

水压

The water pressure can be adjusted according to push the “WATER PRESSURE”: low,medium, highunctions can't work.
循环按“水压”键对水压大小进行调节。水压分高、中、低三档。

自动冲水

When cleaning after completion, press the "auto flush" button, the toilet will be automatically flush.
当清洗完毕后，按“自动冲水”键，马桶会自动进行冲水，如清洗后不按烘干键起身，马桶也会进行自动冲水。注意:要实现自动冲水功能，必须要先打开自动冲水功能键。

喷口位置

When clean, press "forward" button, can make the vent position forward. Press the "back" button, can make the vent position sink down.
在清洗时，按“前移”键，可以使喷口位置前移。按“后移”键，可以使喷口位置后移。

E 键

Press the button"E" on the remote control, cleaning one minutes later the seat will be transferred to warm wind drying function.
按遥控器上的E键，进入全自动功能即臀部清洗一分钟后自动转入暖风烘干功能。

NOTICE 注意事项

1.Before using please check the earthing device on the power socket which is connected with the power plug of the toilet seat ,the socket shall be reliably earthed.
2.The products require AC power of 220V rate voltage,50HZ or 60Hz frequency.
3.Trampling or striking the products is strictly forbidden.
4.Set the products far away from the fire source,and spraying the water on it is also strictly forbidden.
5.Children can use this product only with the adults' care and avoid them touching the products alone.
6.Forbid turning off the products with wet hands,and heavy stress on the products is strictly forbidden too.
7.Please pull off the plug if no use the products for long time. Meanwhile,discharge all the water from the tank to avoid freezing in winter.
8.In case of any abnormality,stop using immediately.Pull off the plug and call the professional techinicans to repair.
9.If you want to stand up during the washing,please press the corresponding button(general washing or women washing)to stop before you stand up.Please timely clean the nozzle to keep cleaning and water fluent.

1. 使用前应检查与本便座插头连接的电源插座应可靠接地。
2. 产品使用额定电压为220V，频率50HZ或60HZ的交流电源。
3. 产品严禁人员踩踏或重物撞击。
4. 产品远离火源，严禁向产品注水及汽油和化学溶剂擦洗塑料件表面。
5. 儿童应在成人监护下使用，避免让儿童单独接触产品。
6. 请勿用湿手插拔电源插头或用力拉扯电源线。
7. 长期不用时，应将电源插头从插座上拔下。同时放出水箱中的水，以防冬天结冰。
8. 产品出现故障应立即停止使用，取下电源插头，由维修部或专业人员修理。
9. 在冲洗过程中若要站起来，应按相应的冲洗键（“臀部清洗”或“女士专用”键），待停止后再站起。应定时对冲洗杆进行擦洗，保持冲洗杆的清洁和出水口的流畅。

	cause	solution
Power non water for spraying	socket no power or the plug become loose	check the socket power or see if the plug match socket
	The power supply cable or the leakage protection damaged	It should be replaced by professional technician
	Inside of the body appears the malfunction	
	The outside tap water-pressure is too lower	check if the supply water-pressure match toilet seat
	Water-inlet filter block or the spray orifice block	Cleaning filter net or let spray pole spurt out the water to wash the orifice .
	Spraying function badly touched or circuit damaged	It should be replaced by professional technician
water non-hot for washing	Water temperature is too low	Adjust the water temperature set-level
	Galvanothermy pipe or the apparatus part damaged	It should be replaced by professional technician
toilet seat non-warm	The keystoke of seat temperature or the inside apparatus parts badly touch	

	原因	处理
电源不通	插座上没电或插头松动	检查插座电源或插座与插头配合
	电源线或漏电保护器损坏	由专业维修人员更换
	机内出现故障	
冲洗不出水	外界自来水压力过低	检查供水压力是否与本机相符
	进水过滤器堵塞或喷孔堵塞	清洗过滤网或喷杆出水喷孔
	冲洗功能键接触不良或电路损坏	由专业维修人员检查修理
清洗用水不热	水温设定过低	调节水温设定档
	电热管或其他元器件损坏	由专业维修人员检查修理
座圈不暖	座圈温度设定按键或内部元器件接触不良	

LIMITED ONE-YEARWARRANTY

This product is warranted for one year from date of purchase.We will be responsible for any problems caused by manufacturing defects provided with the invoice.We will, at its election, repair, replace or make appropriate adjustrnent where.We inspection discloses any such defects occurring in normal usage within one year after purchase.
Damages to the product caused by misuse, abuse and installation that is not in accordance with the owner s manual are not covered by this warranty.
To obtain quick warranty service, please contact your dealer (Original sales receipt must be provided as the proof of purchase.).
This is our exclusive written warranty.

一年有限担保

本产品自购买之日起即获得本公司一年的质量保证。凭购货发票，本公司将免费承担由制造质量引起的任何问题。经核查后，本公司有权决定是修理、更换还是作适当的调整。
担保也不包括外观损伤、使用不当以及未按说明书安装的损失。
为获得快捷的担保服务，请联系您的销售商(请出示销售发票原件作为购货凭证)。
这是我们全部的书面担保。

Shanghai Kohler International Trade Co., Ltd.,
Address: Room324, 2 Xinlin Rd,
Waigaoqiao Free Trade Zone, Shanghai
Tel: 021-26062000
Postcode: 200131

上海科勒国际贸易有限公司
地址:上海市外高桥保税区新灵路106号2号楼324室
电话：021-26062000
邮编：200131

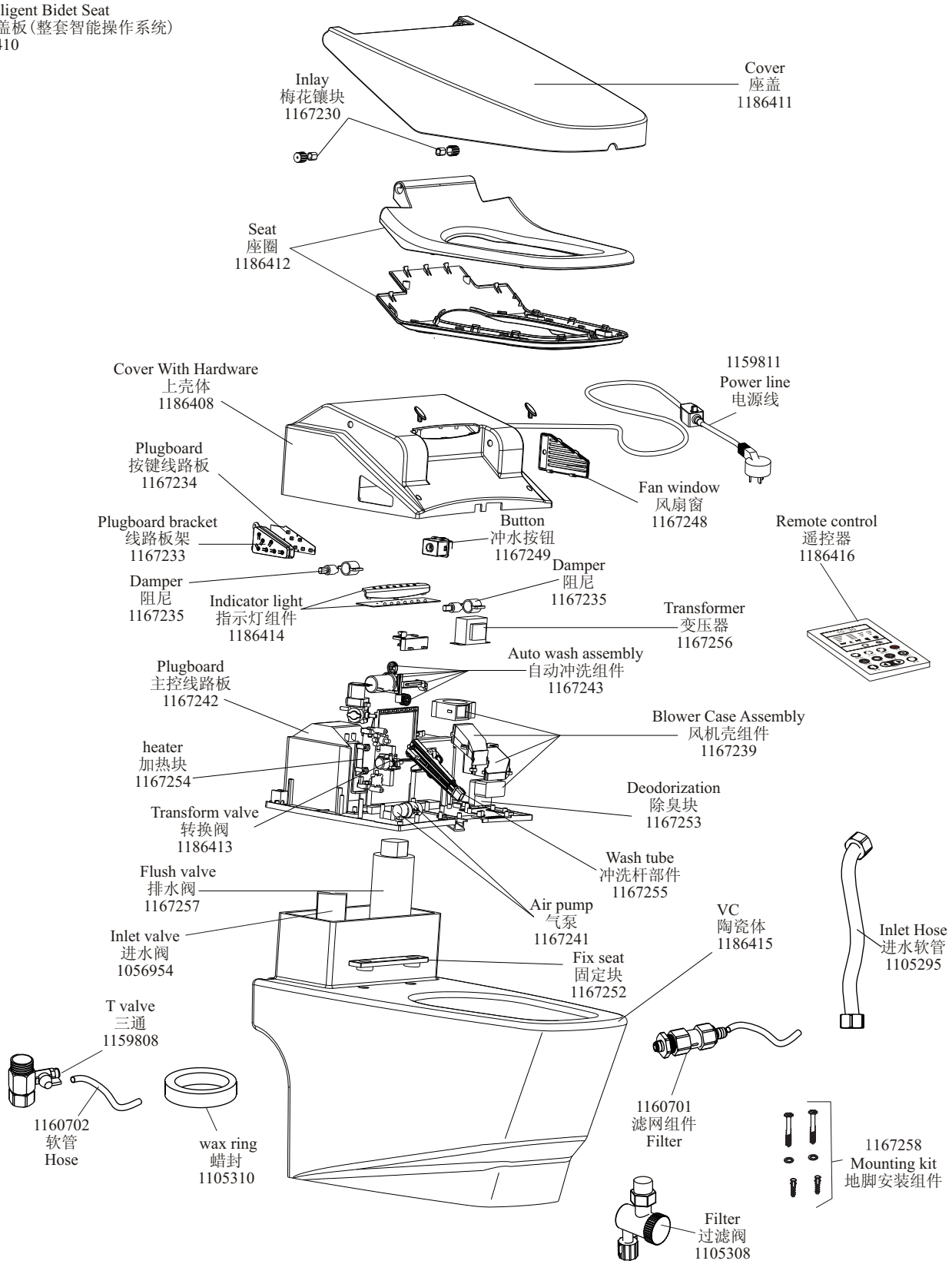
*Intelligent Bidet Seat
智能盖板(整套智能操作系统)
1186410
Inlay
梅花镶块
1167230
Cover
座盖
1186411
Seat
座圈
1186412
Cover With Hardware
上壳体
1186408
1159811
Power line
电源线
Plugboard
按键线路板
1167234
Fan window
风扇窗
1167248
Plugboard bracket
线路板架
1167233
Button
冲水按钮
1167249
Remote control
遥控器
1186416
Damper
阻尼
1167235
Damper
阻尼
1167235
Indicator light
指示灯组件
1186414
Transformer
变压器
1167256
Auto wash assembly
自动冲洗组件
1167243
Plugboard
主控线路板
1167242
Blower Case Assembly
风机壳组件
1167239
heater
加热块
1167254
Deodorization
除臭块
1167253
Transform valve
转换阀
1186413
Wash tube
冲洗杆部件
1167255
Flush valve
排水阀
1167257
Air pump
气泵
1167241
VC
陶瓷体
1186415
Inlet Hose
进水软管
1105295
Inlet valve
进水阀
1056954
Fix seat
固定块
1167252
T valve
三通
1159808
1160702
软管
Hose
wax ring
蜡封
1105310
1160701
滤网组件
Filter
1167258
Mounting kit
地脚安装组件
Filter
过滤阀
1105308