卡丽 KARAT®

安装说明书 INSTALLATION INSTRUCTIONS

SELENE/思琳
PULL-OUT SPRAY LAVATORY FAUCET
抽取式花洒脸盆龙头
14737T-CP

BEFORE YOU BEGIN 安装之前

- Please read the instructions carefully
- Please give the instructions to the end customer after installation
- The shape and components of the product do not necessarily comply with the illumination which is only for your reference.
- Please purchase a suitable and usable connecter
- It is recommended that the customer invite professionals for the installation
- Get these tools at hand: adjustable wrench, screwdrivers, thread sealant, pliers, electric hammer and etc.
- The following pictures for your reference do not necessarily comply with the products. Please contact the seller or Shanghai Kohler International Trade Co. Ltd. if you have any question related to installation.

- 请详细阅读本说明书
- 安装完毕后，请务必将本说明书交给最终客户
- 产品外形及所包含的配件以实物为准，示意图仅供参考
- 请购买一个正确且有效的连接装置
- 建议客户请专业的安装人士安装
- 准备以下工具：活动扳手，螺丝刀，密封胶带，钳子，电锤等
- 以下图例安装步骤仅供参考，一切以所购买实物为准，如遇到不清楚之处，请联系您的销售商或联系上海 科勒国际贸易有限公司

ROUGHING-IN尺寸图

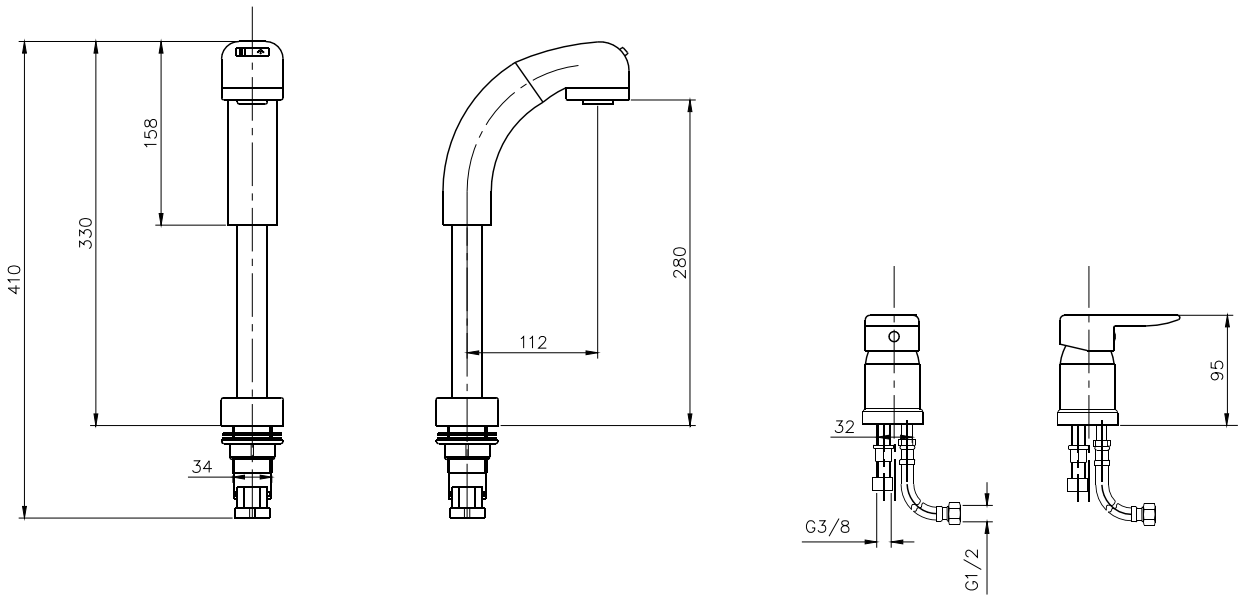

INSTALLATION EXPOSITION

1 Open water supply and clean the debris in the water way. Then install the triangle valve (the triangle valve is not included in this product and needs to be purchased otherwise).

2 Install the bracket stud and the washer in the package onto the faucet if the faucet does not have a bracket stud and washer. Note: Do not damage the screw thread during installation or it may cause failure of the following installation steps.

3 Thread the inlet hoses through the installation hole of the basin as shown in the figure. Rotate them respectively into the two big screw eyes at the bottom of the faucet.

4 Install the faucet onto the basin as shown in the figure. Adjust the interface between the faucet and the basin until the faucet completely covers the faucet hole of the basin.

5 Install the rubber gasket, metal gasket and nut onto the faucet from the back of the basin and screw down the nut, as shown in the figure.

6 Connect the hose inlet with water supply system.

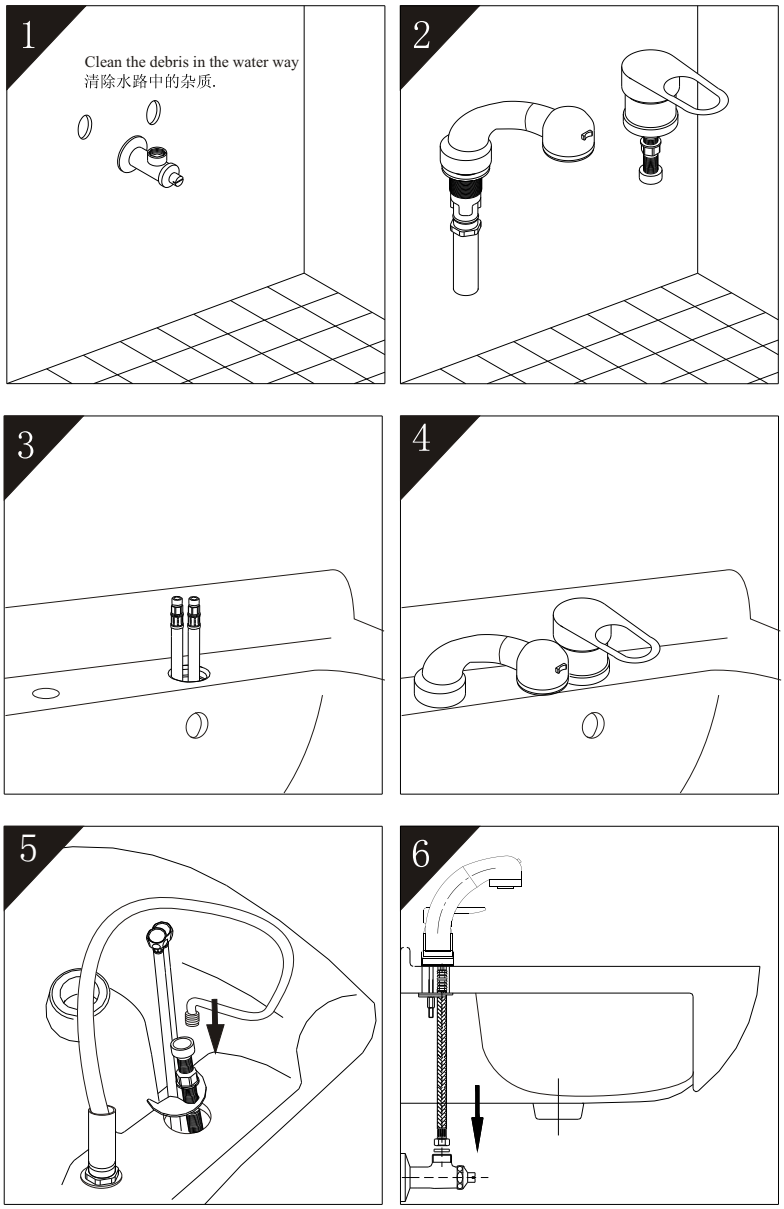

安装说明

1 开启水源，清除供水管路中的杂质. 并安装上三角阀，（三角阀需客户自行购买，本产品不自带）

2 如果龙头没有固定螺杆和底部密封圈请将包装中的固定螺杆和底部密封圈安装于龙头上，注:在安装固定螺杆的过程中，不要伤害螺纹，导致后续无法安装。

3 将进水软管穿过盆的安装孔，方向如图所示，然后分别旋入龙头底部两个较大的螺丝孔内。

4 如图示，将龙头安装到盆上，调整龙头和盆的接触面，使龙头能完全盖住脸盆的龙头孔。

5 如图示，从脸盆背面将橡胶固定垫，金属固定垫和螺母安装到龙头上，并拧紧螺母。将花洒软管连接到龙头出水接头上。

6 将进水软管和供水系统连接。

NOTE AFTER INSTALLATION

1 Please open water supply after installation, check for any leakage at each joint and see if all functions are normal.
2 The handle cap should be screwed down by hands instead of tools. Please do not screw down the hand cap too tightly in a bid to prevent water leakage.
3 If the lower part of the handle leaks water, please remove the handle and screw down the adjustment ring.
4 If there is a continuous leakage, please turn down the hose inlet and change the valve stem.

安装完毕注意事项

1 安装完毕后请开启水源，检查各连接处有无漏水，并检测各项功能是否正常
2 把手盖只能用手拧紧，不能借助工具，请不要通过过紧的拧紧把手盖来达到防止漏水的目的
3 假如把手下方漏水，请移走把手并拧紧调整环
4 假如出现持续漏水的现象，请关闭进水阀并替换阀心。

CLEANSING AND MAINTENANCE

1 Please do not use rough abrasive or polisher to cleanse the faucet surface while soft cloth with water and neutral detergent is preferred.
2 Do not use hard tools or corrosive detergents to cleanse the faucet to avoid damage.

清洁与维护

1 清理龙头表面污垢时，请不要用粗糙的研磨剂或抛光剂来清洗，请用软布沾清水加中性清洁剂擦拭即可
2 勿用坚硬的工具和强腐蚀性的清洁剂对龙头进行清洗，否则会对龙头造成伤害

FIVE-YEARS WARRANTY

* Our company provides five years warranty for its faucets to be leak and drip free during normal residential use. We also warrant all other aspects of its faucets to be free of defects of material and workmanship during normal residential use for one year. Our company will be responsible any problems caused by manufacturing defects provided with the invoice .Our company will, at its election ,repair ,replace or make appropriate adjustment where Our company inspection discloses any such defects occurring in normal usage within warranty .

* The warranty, including products, is limited clearly. Our company is not responsible for other damages appeared after the warranty. Also, the warranty does not cover problems arising from labor charges, incorrect use and installation.

5年有限担保

* 本产品自购买之日起，在正常使用下任何由阀芯造成的龙头滴漏现象，我司将提供长达5年的质量担保，同时对正常使用下的龙头制造和质料上的瑕疵提供1年的质量担保。在质保期内，凭购货发票，我司将免费承担由制造质量引起的任何问题。经核查后，我司有权决定是修理，更改，还是做适当的调整。

* 这里的担保，包括产品都已明确地限制在该担保期内。本公司对以后出现的损坏不负有任何责任。担保也不包括外观损伤，使用不当及未按说明书安装的损失。

Shanghai Kohler International Trading Co., Ltd.
Address: Room324, Building No.2,No.106, Xinling Rd, Waigaoqiao Free Trade Zone, Shanghai
Tel: 021-23052288
Postcode: 200131

上海科勒国际贸易有限公司
地址：上海市外高桥保税区新灵路106号2号楼324室
电话：021-23052288
邮编：200131
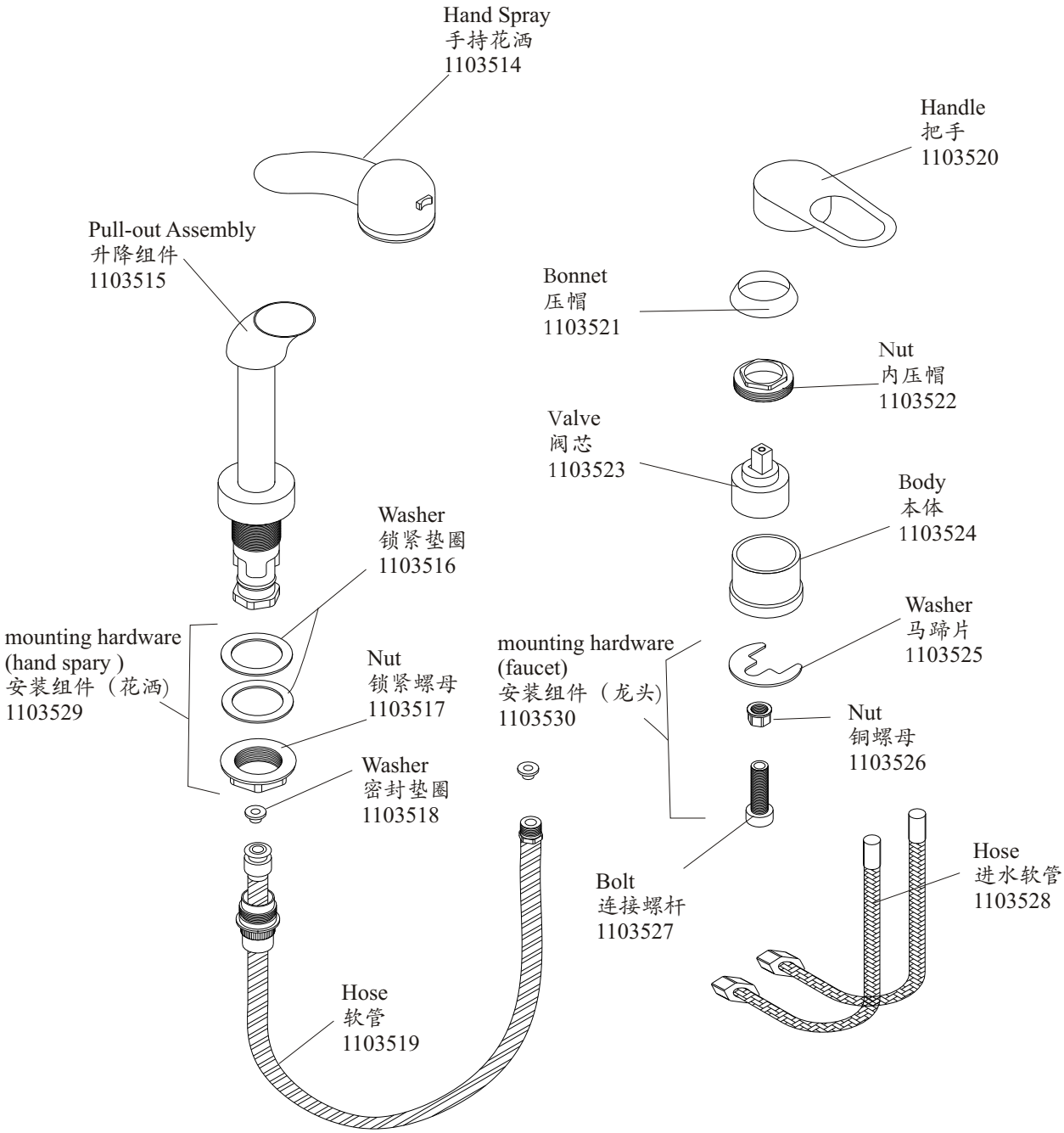
SELENE/思琳
PULL-OUT SPRAY LAVATORY FAUCET
抽取式花洒脸盆龙头
14737T-CP