卡丽 KARAT

安装说明书 INSTALLATION INSTRUCTIONS

MAGSAT II/梅格赛II
双花洒淋浴柱
DUAL SHOWER COLUMN
37358T-CP

BEFORE YOU BEGIN

Please read these instruction carefully familiarize yourself with the required tools,materials,and installation sepuences.Follow the sections that pertain to your patticular installation. This will help you avoid costly mistakes.In addition to proper installation,read all operating and safety instructions.
All infromation in these instructions is based upon the latest product infromation available at the time of publication. Karat reserves the right to make changes in product characteristics, packageing, or availability at any time without notice.
These instructions contain important care, cleaning,and warranty information,**please leave instructions for the consumer**

NOTES:
Flush the water supply pipes thoroughly to remove debris.
The minimum inlet water pressure for the diverter is 0.05Mpa(0.5bar)
The hightest working pressure foe handspray is 0.5Mpa (5bars). If it exceeds 0.5Mpa(5bars),a pressure reducer is needed. The hightest water and environment temperature is 60°C please keep handspray away from heater,or maybe damage it and hurt user.

安装之前

请仔细阅读说明书，熟悉所需工具、材料和安装顺序，参照相关章节完成您所需的安装，以避免昂贵的损失，除了正确的安装外，请详阅所有的操作和安全说明。

本说明书所含的一切资料均以印刷时所有的最新产品为准，卡丽公司保留权利随时更改产品特性、包装或供应情况，恕不另行通知。

本说明书也包含了有关保养、清洁及产品担保等重要信息-**请交予用户保存**。

注意事项：
一定要先彻底冲洗供水管以及清除管道中的杂质。
切换阀正常工作的最小水压为：0.05Mpa(0.5bar)。

花洒最高工作水压为0.5Mpa(5bars)，水压超过0.5Mpa (5bars),时需要安装减压阀。花洒最高工作温度及环境温度为60°C。请特别注意，花洒需远离浴霸，否则可能损坏花洒，甚至对使用者造成伤害。

ROUGHING-IN

Unit:mm

尺寸图

单位: 毫米

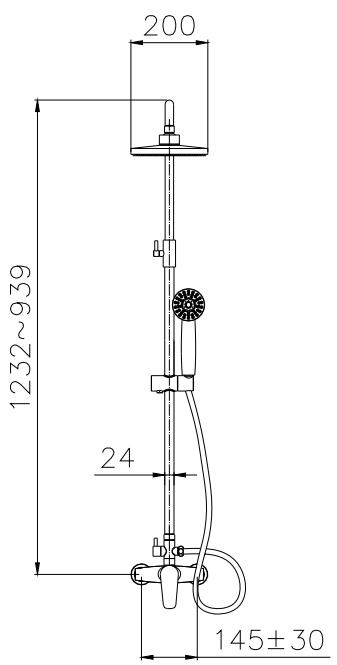

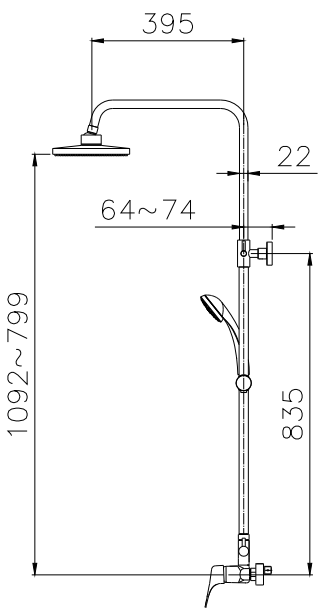

1126777T-01-A

INSTALLATION 安装

1 HOW TO INSTALLATION THE FAUCET

to perform installation ,installer must privide G1/2 female supply fittings,spaced 145mm apart , level and not extending beyond finished wall surface. Flush the water supply pipes thoroughly to remove any debris .

Install the two offset connectors into the hot and cold supply pipes. Use appropriate thread sealants on pipe threads.

Adjust the center-to -center distance between the connectors to 145mm and level.Thread the trim caps onto the connectors so that the trim caps contact the finished wall.

1 安装龙头

为使安装顺利，G1/2内螺纹管道配件应已经安装好，预留145mm的间距，保持水平，不要凸出墙面，彻底清洗供水管，以清除供水管中的杂质。

使用合适的螺纹密封膏，安装两个接头到冷热供水管。

保持两个接头的中心到中心的距离为145mm，并调整到同一水平。把装饰罩旋入接头，紧贴墙面。

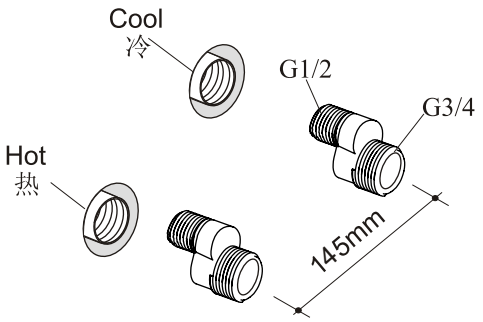

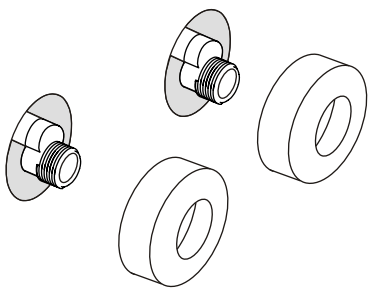

2,HOW TO INSTALL THE COLUMN

On the basis of the centers of the offset connectors, measure 835mm (only for reference, please measure the distance according to the actual dimension of the installed faucet, diverter, slide bar and adjustable base) from the middle of the two connectors and make a mark.

With the mark as the center of the fixing bracket, drill three ø8mm holes according to the three mounting holes in the fixing bracket. Insert the raw lplugs into holes. Tighten the fixing bracket with the screws. Fix the cap to the fixing base.

2,如何安装淋浴杆

以S接头中心为基准,距离两弯头835mm(仅供参考,以装好的龙头阀体、换向阀、淋浴管、调整座的实际尺寸为准)的中间位置作一标记。

以标记为墙座的圆心基点，以墙座上的三个螺钉孔为基准在墙上钻三个直径8MM 的孔，并打入膨胀管，用螺钉将墙座锁紧于墙上，在调节套上套入装饰盖并按紧。

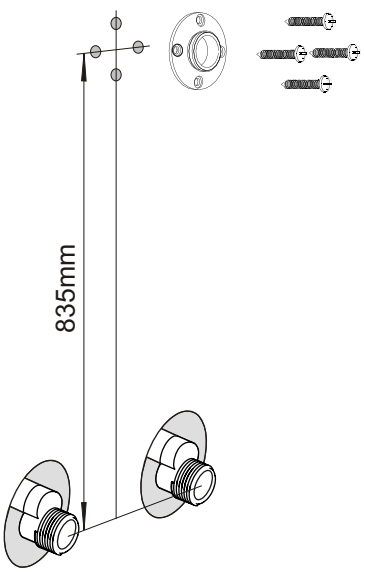

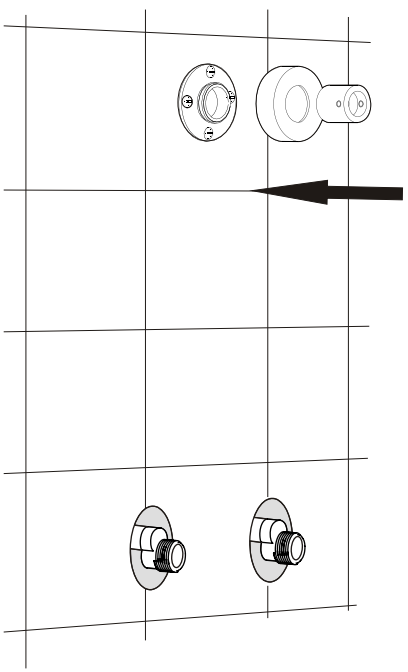

1126777T-01-A

Insert the sliding base to the slide bar and insert the shower arm into the thread side of the slide bar for a certain distance. Tighten the slide bar to the fixing base.

将滑座插在直杆上，并将弯管从直杆有外螺纹一端伸入适当的深度，并将直杆锁紧在调节座上。

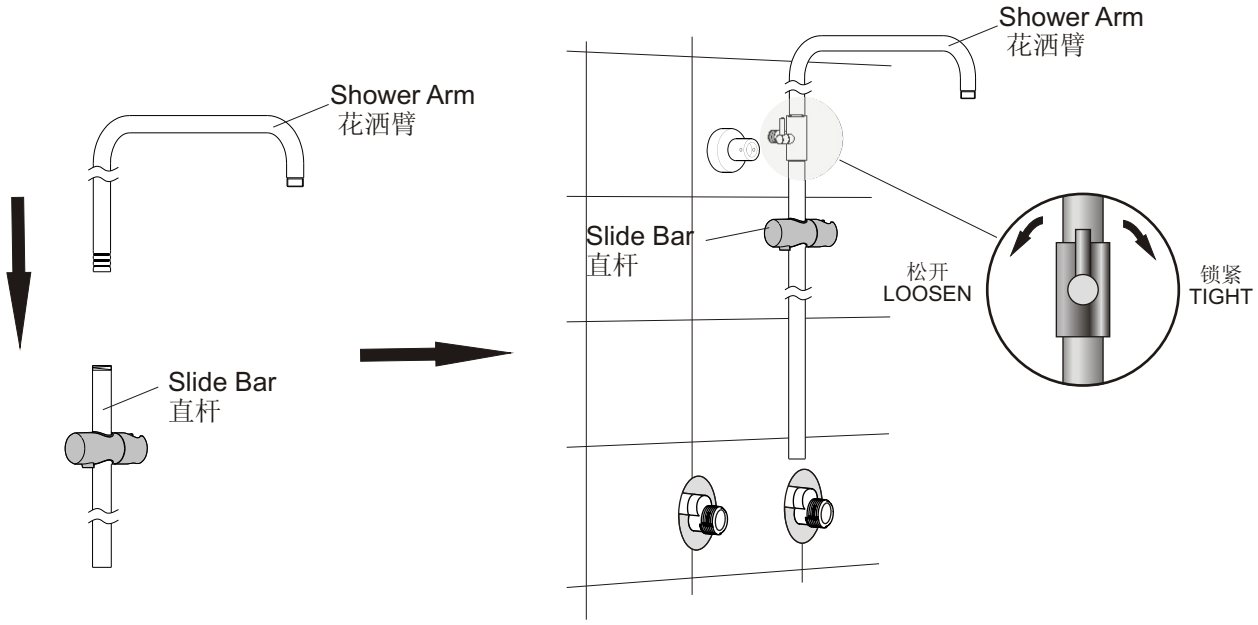

Insert washers into the nut of the diverter and tighten the diverter to the faucet. Insert the installed slide bar into the nut of the diverter and tighten the nut.

将切换阀的锁紧螺母内装上垫片，把切换阀锁紧在龙头上。同时将装好的直杆插入切换阀的锁紧螺母中，并将锁紧螺母锁紧。

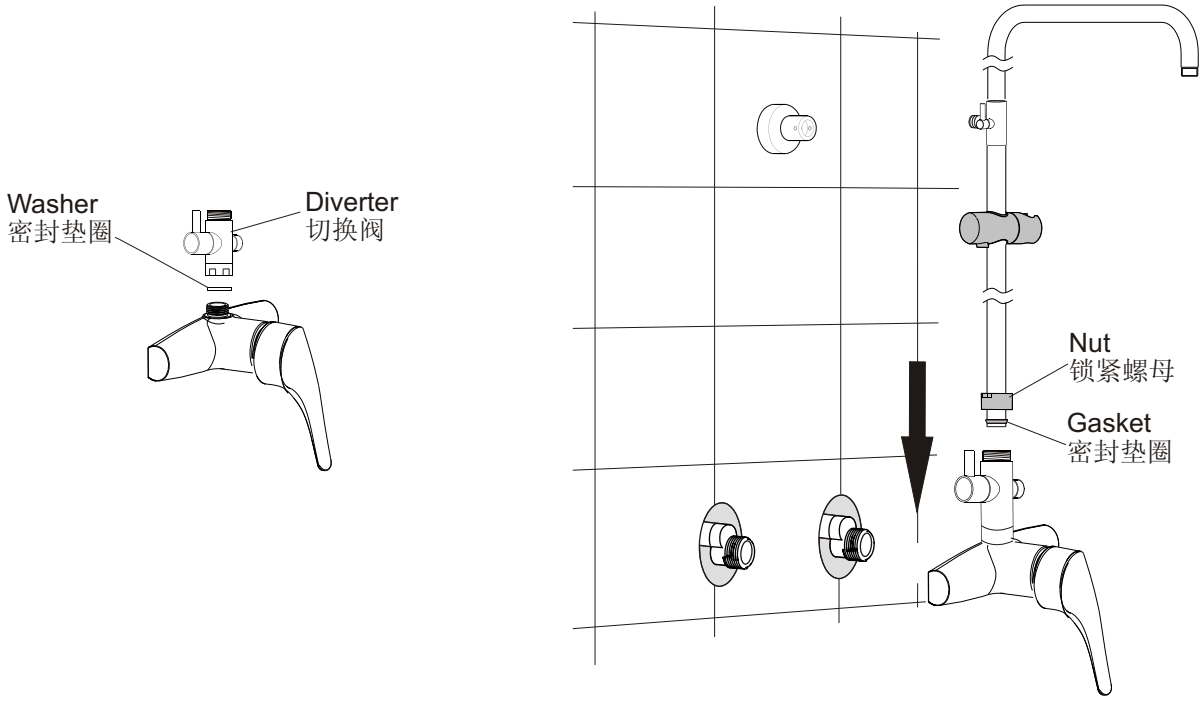

Insert the straight tube of the adjustable base into the fixing base and fix the caps to the two offset connectors. Insert the washers to the nuts and tighten. Adjust the distance between the slide bar and the finished wall and tighten the nut in the fixing base.

将调节座直管部分插入调节套，同时将两装饰盖分别套在两S接头上，在两锁紧螺母中装入垫片并同步锁紧，调整好直杆与墙面的距离并在调节套上锁紧紧定螺钉。

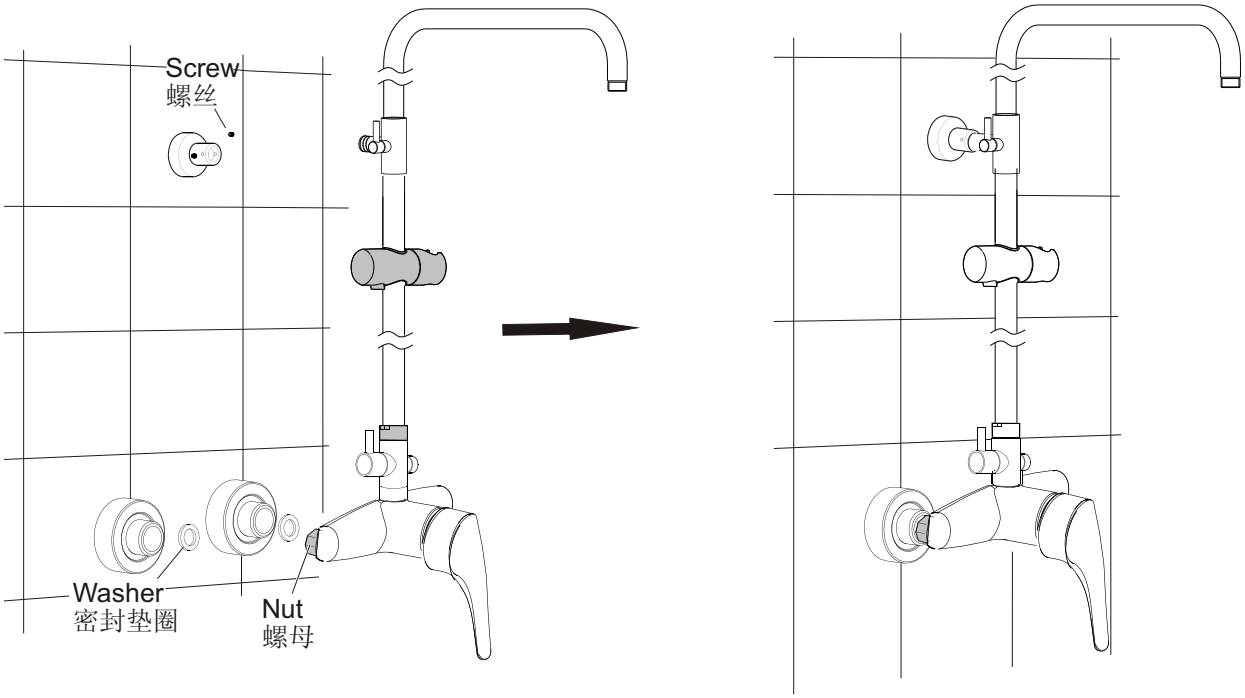

3,HOW TO INSTALL THE SHOWER

Install the shower head to the shower arm and adjust the height and direction of the shower head. Tighten the nut in the adjustable base. Install the hose and handspray.

3,如何安装花洒

将头部花洒安装在弯管上，调整好花洒所需的高度和方向后，锁紧调节座上的锁紧螺母，装软管与手握花洒。

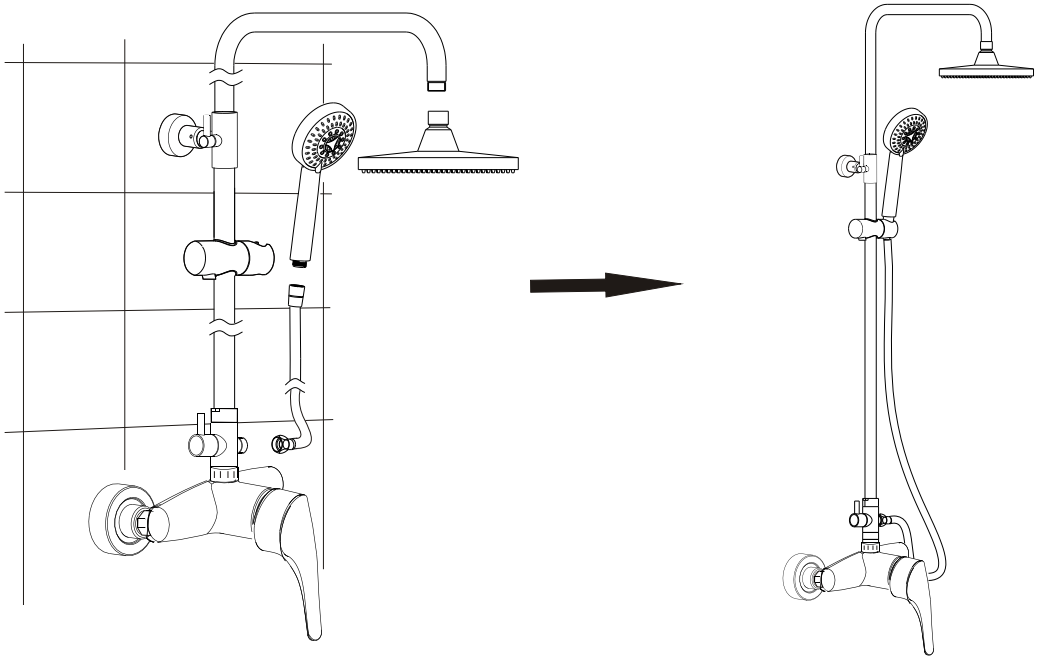

HANDLE OPERATION

Turn the handle gently. Left for hot water. Right for cold water.
Water flows out from spout when diverter is in the normal position and is diverted to hand spray when the diverter knob is lifted.
The middle handle is the switching control valve. Rotate it clockwise to to let the water run out from showerhand while rotate it counterwise to let the water run out from the shower head.

使用说明

将手柄轻轻抬起，左手为热水，右手为冷水。

切换阀处于正常位置时，出水口出水。提起切换阀时，手持花洒出水。

中间手柄为转换控制阀，顺时针调节为手握花洒出水，逆时针调节为头部花洒出水。

CLEANING INSTRUCTIONS

All finishes : clean the finish with a mild soap and warm water. wipe entire surface complately dry with a clean soft cloth. Many cleaners may contain chemicals , such as ammonia chlorine, toilet cleaner etc., Which could adversely affect the finish and are not recommended for cleaning.
Don't use abrasive cleaner or solvents on karat faucets and fitting.

清理说明

适用于所有加工处理过的表面：
以中性肥皂水清洗镀层表面，再以干净的软布彻底擦干整个表面。许多清洁剂，比如氨水、去污粉及洁厕灵等，会对电镀表面造成伤害，切勿使用。

有腐蚀性的清洁剂或溶剂不可使用于卡丽的水龙头及其附件上。

FIVE -YEARS WARRANTY

Our company provides five years warranty for its faucets valve to be leak and drip free during normal residential use. We also warrant all other aspects of its faucets to be free of defects of materrial and workmanship during normal residential use for one year. Our company will be responsible any problens caused by manufacturing defects provided with the invoice. Our company will,at its election ,repair ,replace or make appropriate adjustment where our company inspection discloses any such defects occurring in normal usage within warranty.

The warranty, including products, is limited clearly. Our company is not responsible for other damages appeared after the warranty. Also,the warranty dose not cover problems arising from labor charges,incorrect use and installation.

五年有限担保

本产品自购买之日起，在正常使用下任何由阀芯造成的龙头滴漏现象，我司将提供长达五年的质量担保，同时对正常使用下的龙头制造和质料上的瑕疵提供一年的质量担保。在质保期内，凭购货发票，我司将免费承担由制造质量引起的任何问题。经核查后，我司有权决定是修理、更改、还是做适当的调整。

这里的担保，包括产品都已明确地限制在该担保期内。本公司对以后出现的损坏不负有任何责任。担保也不包括外观损伤，使用不当及未按说明书安装的损失。

Shanghai Kohler International Trade Co., Ltd.,
Address: Room324, 2 Xinlin Rd,
Waigaoqiao Free Trade Zone, Shanghai
Tel: 021-26062000
Postcode: 200131

上海科勒国际贸易有限公司
地址：上海市,外高桥,保税区,新灵路106号2号楼324室
电话：021-26062000
邮编：200131

1126777T-01-A

卡丽 KARAT®

维修零件图 SERVICEPARTSPAGE

MAGSAT II/梅格赛II
双花洒淋浴柱
DUAL SHOWER COLUMN
37358T-CP

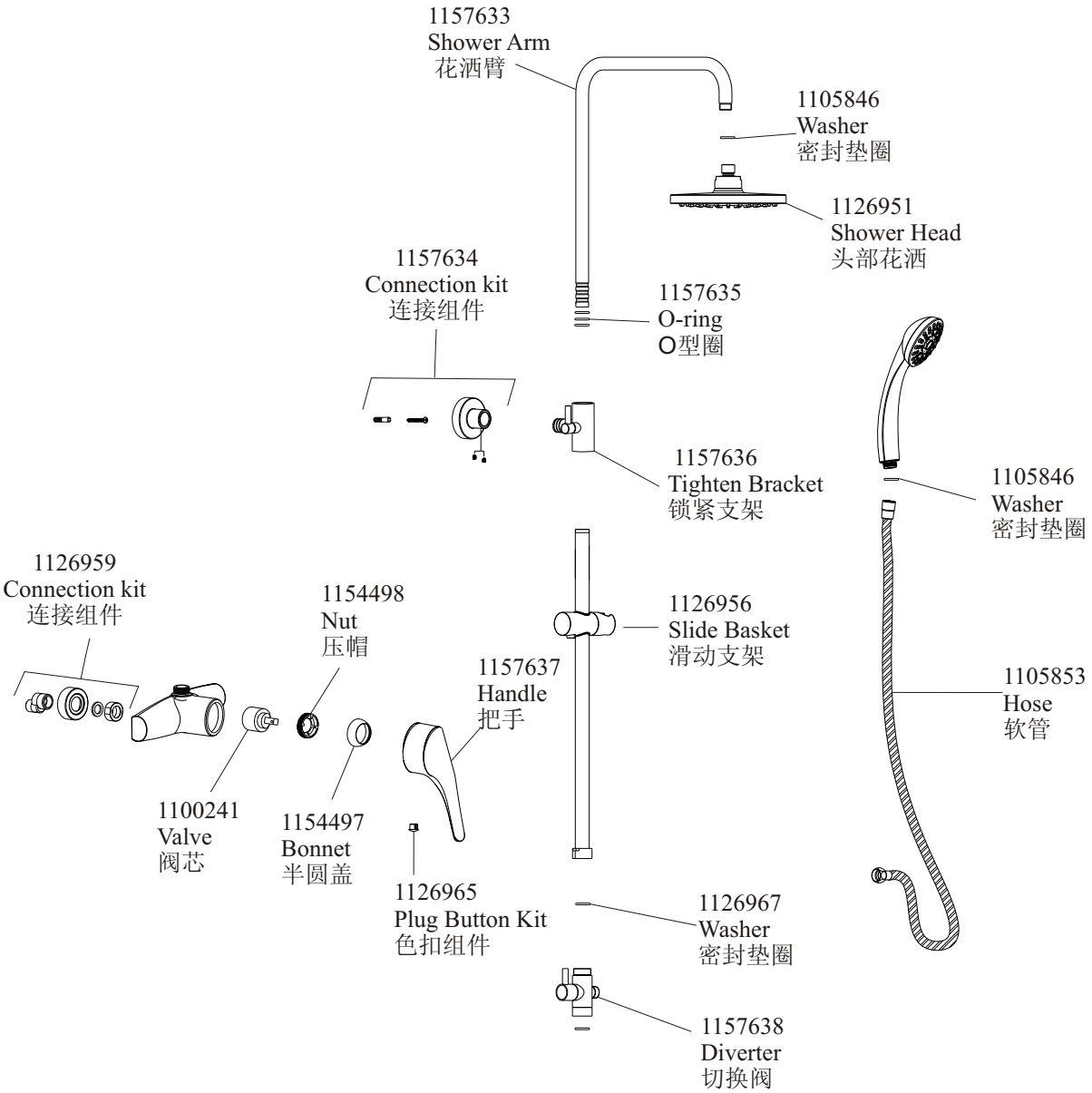

1126777T-01-A