卡丽 KARAT

# 安装说明书 INSTALLATION INSTRUCTIONS

SAPPHIRE MIRROR
沙菲镜子
17626T-WF

## BEFORE YOU BEGIN 安装之前

- Please read these instructions carefully to familiarize yourself with the required tools, materials, and installation sequences. Follow the sections that pertain to your particular installation. This will help you avoid costly mistakes. In addition to proper installation, read all operating and safety instructions.
- All information in these instructions is based upon the latest product information available at the time of publication.
- These instructions contain important care, cleaning, and warranty information-**Please leave instructions for the consumer.**
- Obey all electrical regulations in force at the time of installation.

  ⚠**Warning! Risk of personal injury and product damage.** Mirrored cabinets are very heavy and should not be lifted or installed by just one person.
- 请仔细详阅本指引，以便熟悉所需工具、物料及安装程序。请遵照适用的章节来安装本产品，以免安装失当导致不必要的损失。除了有关正确的安装方法之外，还务请详阅所有操作及安全指引。
- 本指引所载之一切资料，均以印刷时所有之最新产品情况为基础。
- 本指引也包含了有关保养、清洁及担保等重要资料-**请交予用户保存。**
- 遵循当地所有的电器安装规定。

  ⚠**警告! 小心人身伤害和产品受损**。镜子较重，安装时请勿一人操作。

## SAFETY: WARNINGS

Products are precision engineered and should give continued superior and safe performance, provided:
1. They are installed, commissioned, operated and maintained in accordance with the recommendations given in this Manual.
2. Periodic attention is given, as necessary, to maintain the product in good functional order. Recommended guidelines are given in the **MAINTENANCE** section.

Carefully inspect the new fixture for any signs of damage.
When installing Products, manufacturers guidelines for power tool safety should be followed.

## 安全：警告

产品经过精确制造，性能卓越，经久耐用。为保证产品品质，您必须：
1. 按照此手册中推荐的方法进行安装、起动、操作及维护。
2. 如有需要，定期检查，令产品保持良好性能状态。日常维护章节中列有推荐方法。

仔细检查新产品是否有损伤。
在安装产品时，必须遵循制造商有关电动工具的安全指令。

## TOOLS AND MATERIALS / 工具及材料

| | |
|---|---|
| Pencil | 铅笔 |
| Measuring Tape | 卷尺 |
| Level | 水平尺 |
| Miter Box | 钻子箱 |
| Safety Glasses | 安全眼镜 |
| Drill | 手枪钻 |
| Screwdrivers | 螺丝刀 |
| Hole Saw | 孔锯 |

1123593-T01-A

## ROUGHING-IN 尺寸图

UNIT:mm
单位：毫米

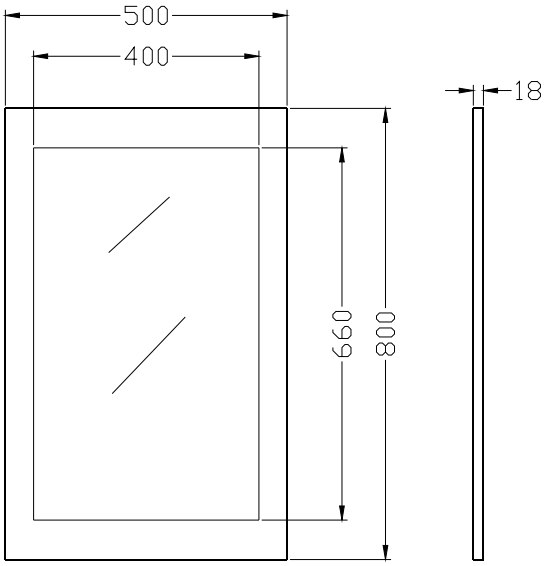


## INSTALLATION 安装

### Install Mirror Cabinet

1. Mark the position of hanged bracket on the wall according To dimensions as illUstrated.

   ⚠**Caution!** Avoid the cables and pipes inner set when drilling in the wall.

**Note:** Different types of bolts are required for different decoration boards. Please apply suitable bolts and board nuts.

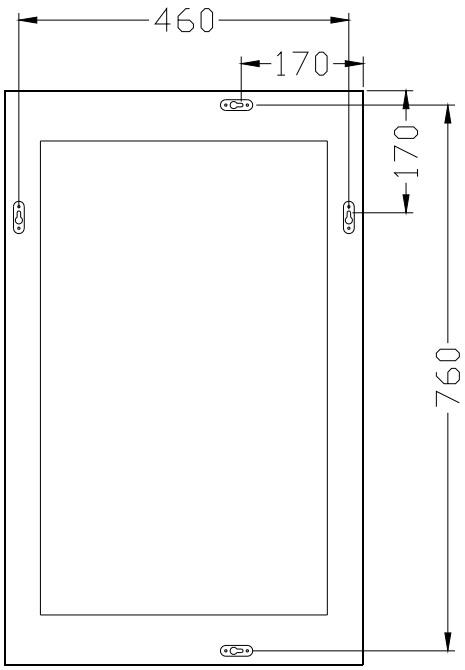


### 安装镜子

1. 根据图示尺寸在墙壁上标出挂墙式托架的位置。

   ⚠小心！在墙壁上钻孔时请务必小心避开内置的缆线和管道。

**注意**：不同的装饰墙需要不同型号的螺钉。请使用合适的螺钉和墙面插塞。

2. Drill holes for fixing bolts and nuts. Using level to make sure that is level.
3. Adjust bracket clips at the back of mirror to make sure that the mirror is correctly hanged.
4. Hang the mirror on the wall.
5. make sure that the mirror is level.

2. 钻好插塞和螺钉孔。使用水平仪检查,确保水平。
3. 调整镜子后面的隐藏挂片确保镜子能够正确悬挂。
4. 将镜子挂在墙上。
5. 使镜子保持水平。

1123593-T01-A

## USER MAINTENANCE

⚠**Warn! Risk of product damage.**

1. Many cleansers contain abrasive and chemical substance which is not suitable for cleaning stainless steel, enamel, plating or plastic products. You may use mild cleansers or soaps to clean the surfaces.Wipe any splashes of cleaner solutions from the surface with clean soft cloth.
2. Maintain ventilation in the bathroom, and separate the dry area from the damp one if conditions permit. Try to open the door and windows of the bathroom and maintain good ventilation.
3. Bathroom cabinet are dealt with strict procedures for damp-proof, whose good damp-proof function ensures good performance even in bathroom of huge humidity. Yet do not splash and pour water directly on the bathroom cabinet. Make sure that the bathroom is not over damp and wipe any splashes from surfaces immediately.
4. Maintenance of door board: Clean and wipe door board regularly, and wipe the condensation vapor with dry and soft cloth.
5. Wipe mirror surface with chamois regularly to guarantee the persistent excellent performance.
6. Please do not sit, lean or step on the cabinet.

## 日常维护

⚠**警告！小心产品受损**

1. 许多清洁剂都含有研磨剂及化学物质，不可用于清洁不锈钢、搪瓷、镀层或塑料制品。这些表面须使用温和的清洁剂或皂液进行清洁，将残余洗涤剂洗干净，然后用干净的软布擦干。
2. 卫生间请保持良好的通风状态，有条件的可以干、湿分离，平常尽量保持浴室空气畅通，养成开窗开门的习惯。
3. 浴柜都经过严格的防潮处理，其良好的防潮性能可以保证在相对湿度很大的浴室里有良好的使用性，但使用时仍然不可以随意任浴柜被水浇、溅。所以请避免卫生间过于潮湿，遇有水迹要及时擦干。
4. 门板的保养：经常定期清洁、擦拭，洗浴后的冷凝水蒸气应用干燥的软干布擦净，保持门板的干爽。
5. 镜面最好用麂皮经常擦拭，可以保障使用质量经久如一。
6. 请勿坐、倚靠、踩踏在浴柜上。

## LIMITED ONE-YEARWARRANTY

**Bathroom Furniture and Fittings Limited One-yearWarranty**

Bathroom furniture and fittings are warranted to be free of manufacturing defects.

This product is warranted for one year from date of purchase.We will be responsible for any problems caused by manufacturing defects provided with the invoice.We will, at its election, repair, replace or make appropriate adjustrnent where.We inspection discloses any such defects occurring in normal usage within one year after purchase.

Damages to the product caused by misuse, abuse and installation that is not in accordance with the owner s manual are not covered by this warranty.

To obtain quick warranty service, please contact your dealer (Original sales receipt must be provided as the proof of purchase.).

This is our exclusive written warranty.

## 一年有限担保

**浴室家具及配件担保——一年有限担保**

公司担保其浴室家具及配件在制造工艺上无瑕疵。

本产品自购买之日起即获得本公司一年的质量保证。凭购货发票，本公司将免费承担由制造质量引起的任何问题。经核查后，本公司有权决定是修理、更换还是作适当的调整。

担保也不包括外观损伤、使用不当以及未按说明书安装的损失。

为获得快捷的担保服务，请联系您的销售商(请出示销售发票原件作为购货凭证)。

这是我们全部的书面担保。

Shanghai Kohler International Trading Co., Ltd.
Address: Room324, Building No.2,No.106, Xinling Rd, Waigaoqiao Free Trade Zone, Shanghai
Tel: 021-26062000
Postcode: 200131

上海科勒国际贸易有限公司
地址：上海市外高桥保税区新灵路106号2号楼324室
电话：021-26062000
邮编：200131

1123593-T01-A

SAPPHIRE MIRROR
沙菲镜子
17626T-WF

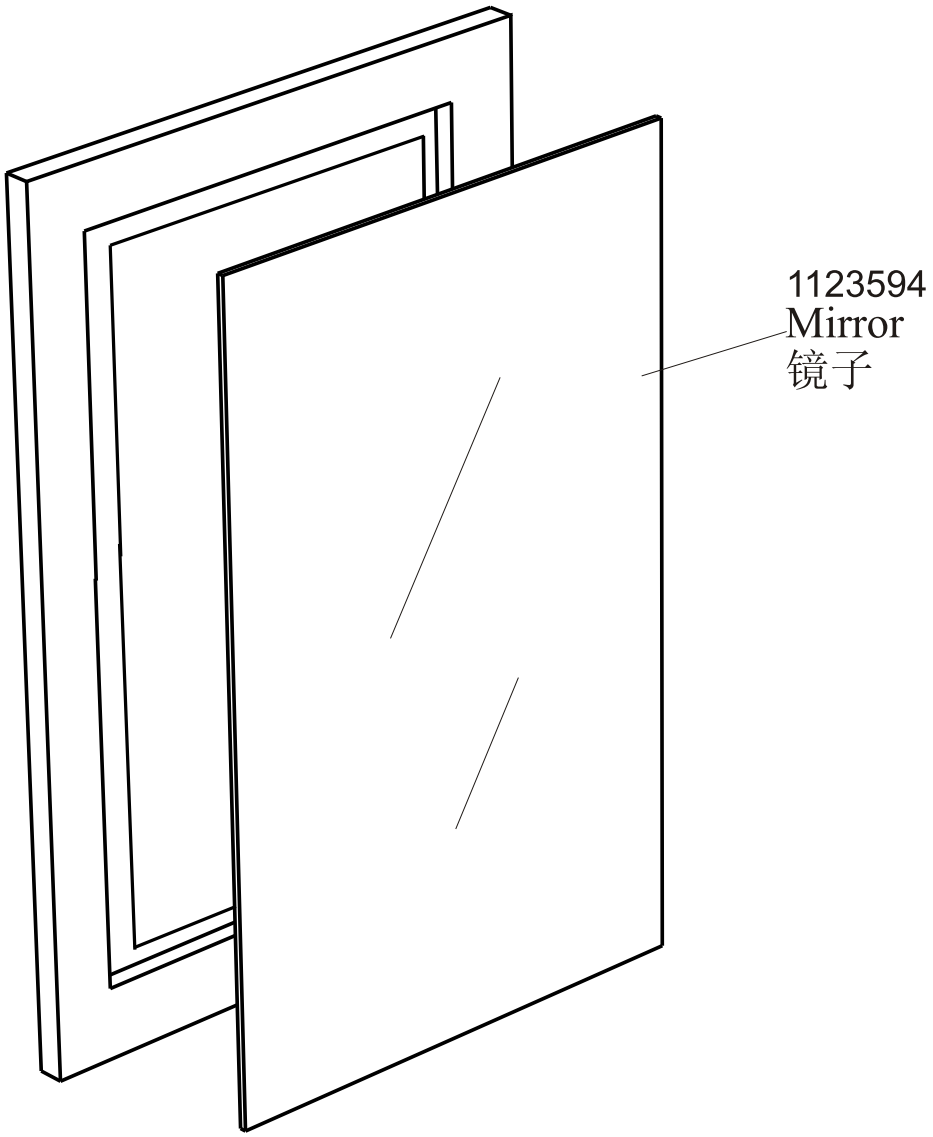


1123593-T01-A