卡丽 KARAT®
安装说明书 INSTALLATION INSTRUCTIONS

洁德 JADE

安装说明书
INSTALLATION INSTRUCTIONS
挂墙式实木浴室柜
WALL-HUNG WOODEN BASIN CABINET
36993T-MPL

BEFORE YOU BEGIN

- Please read these instructions carefully to familiarize yourself with the required tools, materials, and installation sequences. Follow the sections that pertain to your particular installation. This will help you avoid costly mistakes. In addition to proper installation, read all operating and safety instructions.
- All information in these instructions is based upon the latest product information available at the time of publication. Kohler China. reserves the right to make changes in product characteristics, packaging, or availability at any time without notice.
- These instructions contain important care, cleaning, and warranty information-**please leave instructions for the consumer.**
- Turn off the water supply.
- The pluming installation must comply with Water Supply Regulations/Bye-laws, Building Regulations or any particular regulations and practices, specified by the local water company or water undertakers. The installation should be carried out by a plumber.
- Before installation carefully inspect the new fixture for any signs of damage.

安装之前

- 请仔细详阅本指引，以便熟悉所需工具、物料及安装程序。请遵照适用的章节来安装本产品，以免安装失当导致不必要的损失。除了有关正确的安装方法之外，还务请详阅所有操作及安全指引。
- 本指引所载之一切资料，均以印刷时所有之最新产品情况为基础，卡丽保留权利随时更改产品特性、包装或供应情况，恕不另行通知。安装家具之前，请先确认所有必需的电气工作均已完成。
- 本指引也包含了有关保养、清洁及担保等重要资料-**请交予用户保存**。
- 关闭供水。
- 管道安装必须遵循当地所有给排水、建筑或者其他的特别规定。管道安装人员必须具备相应资格。
- 安装之前，仔细检查新产品是否有损伤。

ORDERING INFORMATION

This installation covers the following products in the JADE range:
Jade Wall-hung Wooden Side Cabinet.....36994T-MPL
Jade Wall-hung Wooden Cabinet.....36995T-MPL
Jade Unified rostone Basin.....36996T-1-WK
Jade Wall-hung Mirror.....36997T-MPL

订购信息

此安装说明书适用于以下洁德系列家具的安装:
洁德挂墙式实木侧柜.....36994T-MPL
洁德挂墙式实木主柜柜体.....36995T-MPL
洁德一体化人造石台盆.....36996T-1-WK
洁德挂墙式镜子.....36997T-MPL

SAFETY: WARNINGS

Kohler products are precision-engineered and should give continued superior and safe performance, provided:

1. They are installed, commissioned, operated and maintained in accordance with the recommendations given in this Manual.
2. Periodic attention is given, as necessary, to maintain the product in good functional order. Recommended guidelines are given in the **MAINTENANCE** section.

Carefully inspect the new fixture for any signs of damage.

When installing Kohler Products, manufacturers guidelines for power tool safety should be followed.

安全：警告

卡丽产品经过精确制造，性能卓越，经久耐用。为保证产品品质，您必须:

1. 按照此手册中推荐的方法进行安装、起动、操作及维护。
2. 如有需要，定期检查，令产品保持良好性能状态。日常维护章节中列有推荐方法。

仔细检查新产品是否有损伤。

在安装卡丽产品时，必须遵循制造商相关电动工具的安全的指令。

卡丽 KARAT®
安装说明书 INSTALLATION INSTRUCTIONS

洁德 JADE

安装说明书
INSTALLATION INSTRUCTIONS
一体化人造石台盆
UNIFIED ROSTONE BASIN
36996T-1-WK

BEFORE YOU BEGIN

- Please read these instructions carefully to familiarize yourself with the required tools, materials, and installation sequences. Follow the sections that pertain to your particular installation. This will help you avoid costly mistakes. In addition to proper installation, read all operating and safety instructions.
- All information in these instructions is based upon the latest product information available at the time of publication. Karat reserves the right to make changes in product characteristics, packaging, or availability at any time without notice.
- These instructions contain important care, cleaning, and warranty information-**please leave instructions for the consumer.**
- Turn off the water supply.
- The pluming installation must comply with Water Supply Regulations/Bye-laws, Building Regulations or any particular regulations and practices, specified by the local water company or water undertakers. The installation should be carried out by a plumber.
- Before installation carefully inspect the new fixture for any signs of damage.

安装之前

- 请仔细详阅本指引，以便熟悉所需工具、物料及安装程序。请遵照适用的章节来安装本产品，以免安装失当导致不必要的损失。除了有关正确的安装方法之外，还务请详阅所有操作及安全指引。
- 本指引所载之一切资料，均以印刷时所有之最新产品情况为基础，卡丽保留权利随时更改产品特性、包装或供应情况，恕不另行通知。
- 本指引也包含了有关保养、清洁及担保等重要资料-请交予用户保存。
- 关闭供水。
- 管道安装必须遵循当地所有给排水、建筑或者其他的特别规定。管道安装人员必须具备相应资格。
- 安装之前，仔细检查新产品是否有损伤。

SAFETY: WARNINGS

Karat products are precision-engineered and should give continued superior and safe performance, provided:

1. They are installed, commissioned, operated and maintained in accordance with the recommendations given in this Manual.
2. Periodic attention is given, as necessary, to maintain the product in good functional order. Recommended guidelines are given in the **MAINTENANCE** section.

Carefully inspect the new fixture for any signs of damage.

安全：警告

卡丽产品经过精确制造，性能卓越，经久耐用。为保证产品品质，您必须：

1. 按照此手册中推荐的方法进行安装、起动、操作及维护。
2. 如有需要，定期检查，令产品保持良好性能状态。日常维护章节中列有推荐方法。

仔细检查新产品是否有损伤。

INSTALLATION 安装

Install Synthetic Top

1. Install accessories of synthetic Top.
   a. Please follow the sequence of fig1 to install the over flow accessories and drain to the synthetic top.
   b. Apply bond on ① and ② to avoid water seeping.

安装一体盆

1. 安装一体盆上的溢水附件和落水。
   a. 请按图1顺序安装溢水配件。

   b. 在①、②处涂上粘合剂以免渗水。

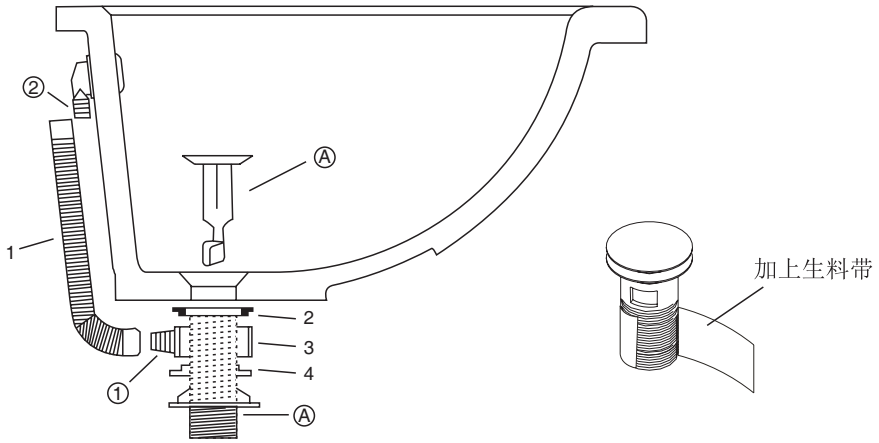

NOTE: Parts 1-4 is supplied with synthetic top and part A is supplied with faucet set.

注意：溢水附件1-4随盆供应，落水件A随龙头供应。

2. Please refer to faucet installation instructions to install faucet.

2. 请按龙头说明书安装龙头。

3. Install the synthetic top on to cabinet.

Attention: Handle with care when install the top. Avoid scrubbing with hard dejects. Must be supported by the basin

3. 安装一体盆到脸盆柜。

注意：安装台盆轻拿轻放，避免与坚硬物品摩擦。需配有脸盆柜作为支撑。

NOTE: The hot and cold water supplies must terminate with a supply shut off Valve.

注意：冷热水管的终端必须与供水管止水阀相连。

   a. Apply silicone sealant to the top of cabinet.
   b. Make sure the top sit on the cabinet.
   c. Adjust the synthetic to match well with the cabinet.
   d. Remove any excess silicone sealant.
   e. Place the overflow cover over the hole in the top.

   a. 在柜体上边缘涂硅胶。
   b. 确保一体盆坐落在柜体上。
   c. 调节一体盆，使其与柜体配合良好。
   d. 除去多余硅胶。
   e. 将溢水盖装至脸盆溢水孔上。

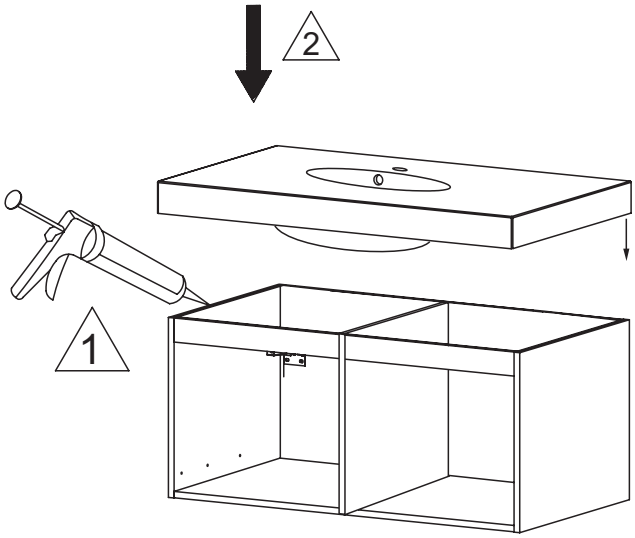

USER MAINTENANCE

Warn! Risk of product damage.

Many cleansers contain abrasive and chemical substance which is not suitable for cleaning stainless steel, enamel, plating or plastic products. You may use mild cleansers or soaps to clean the surfaces. Wipe any splashes of cleaner solutions from the surface with clean soft cloth.

The top should be cleaned with water and detergent. Never use a product which contains abrasive, liquid putty powder or other similar products. If you try to maintain the top with automobile wax on a regular basis, say, once a year, the impermeability of the top will be greatly upgraded. In this way, the little graffito and dirt on the top will be easily removed. If the top blurs after several years' use, you could apply the following method as a remedy to restore its luster. a) To polish the surface of the top with a piece of 1200 abrasive paper dipped with water. b) To work with a polishing paste. In some countries, the temperature of hot water will exceed 60℃. Continuous use of this kind of hot water may lead to crack on the top. Therefore, avoid to use water over 60℃ in the process of installing valves.

Please do not sit, lean or step on the top.

日常维护

警告！小心产品受损。

许多清洁剂都含有研磨剂及化学物质，不可用于清洁不锈钢、搪瓷、镀层或塑料制品。这些表面须使用温和的清洁剂或皂液进行清洁，将残余洗涤剂洗干净，然后用干净的软布擦干。

应该用清水和肥皂清洗台面。禁止使用含有磨蚀剂，液体擦光粉和类似产品的清洗产品。如果您不时地使用车用蜡对台面进行保养，大概一年一次，台面表层的防水性会大大提高。用这种方法，你将轻易地去除台面上的小划痕和污黯处。假如几年后台面变得黯淡，您也可以通过以下方法轻易进行补救，使其重新焕发光泽。您可以采用：a)用1200砂纸蘸水打磨整个台面。b)使用抛光膏。在某些国家，热水温度超过60度，持续使用这种热水，台面表面可能会产生裂缝。安装阀门时，避免水温高于60度。

日常使用时，请勿坐、倚、靠、踩踏在脸盆上。

ONE -YEARS WARRANTY

Our company provides one years warranty for its drain Our company will,at its election ,repair ,replace or make appropriate adjustment where our company inspection discloses any such defects occurring in normal usage within warranty.

The warranty, including products, is limited clearly. Our company is not responsible for other damages appeared after the warranty. Also,the warranty dose not cover problems arising from labor charges,incorrect use and installation.

一年有限担保

本产品自购买之日起，在正常使用下我司将提供一年的质量担保，经核查后，我司有权决定是修理、更改、还是做适当的调整。

这里的担保，包括产品都已明确地限制在该担保期内。本公司对以后出现的损坏不负有任何责任。担保也不包括外观损伤，使用不当及未按说明书安装的损失。

Shanghai Kohler International Trade Co., Ltd.,
Address: Room324, 2 Xinlin Rd, Waigaoqiao Free Trade Zone, Shanghai
Tel: 021-26062000
Postcode: 200131

上海科勒国际贸易有限公司
地址：上海市,外高桥,保税区,新灵路106号2号楼324室
电话：021-26062000
邮编：200131

洁德 JADE

维修零件图
SERVICE PARTS PAGE
一体化人造石台盆
UNIFIED ROSTONE BASIN
36996T-1-WK

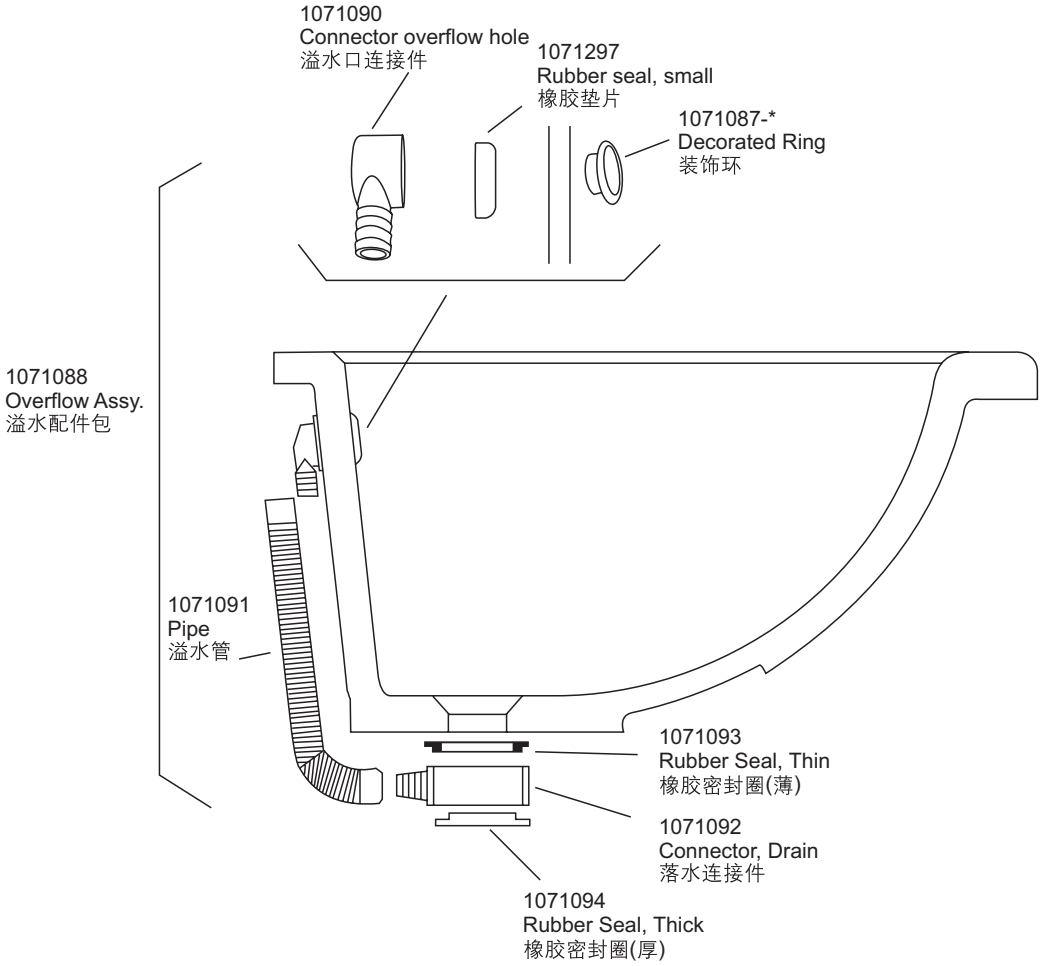

ROUGHING-IN 尺寸图

UNIT : mm
单位: 毫米

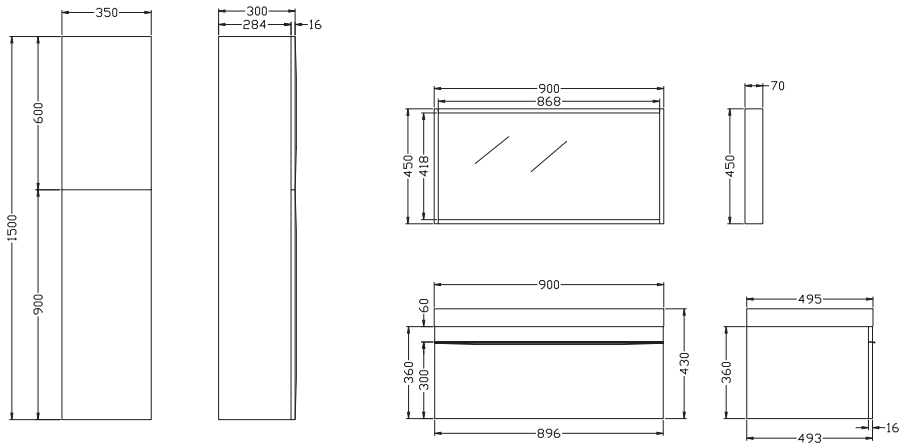

INSTALLATION 安装

INSTALL CABINET

1. Mark the position of cabinet according to dimensions as illustrated,

Caution! Avoid the cables and pipes inner set when drilling in the wall.

安装主柜

1. 根据图示,在墙壁上标示出挂墙安装孔的位置,

小心！在墙壁上钻孔时请务必小心避开内设的缆线和管道。

UNIT : mm
单位: 毫米

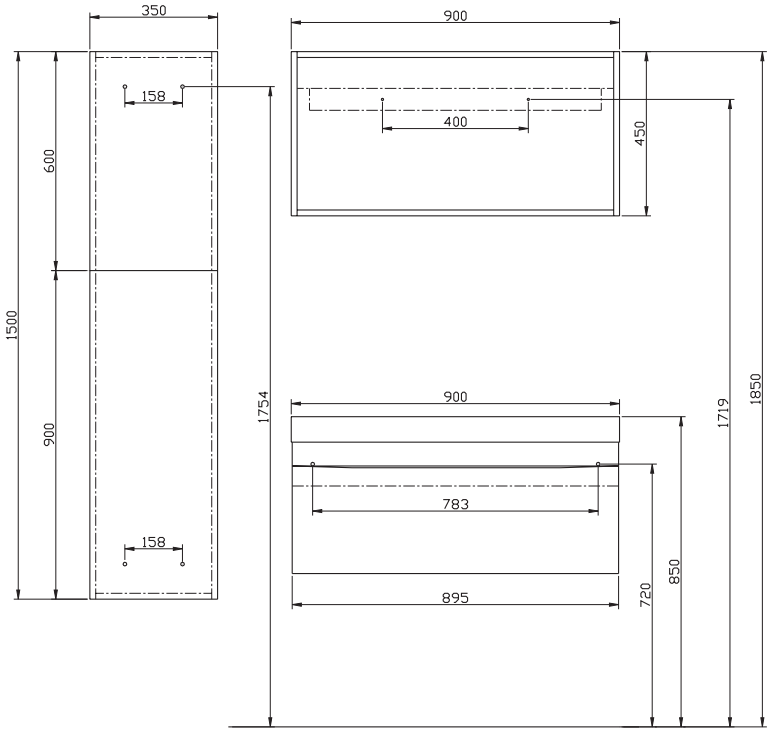

注: 图中标注的尺寸为建议尺寸，客户可根据自己的实际需求确定最终的安装高度。

2. Drill holes for fixing the bracket. Using a level, ensure that the hanged bracket is level.

3. Hang the washbasin cabinet on the wall,Use suitable plugs and bolts, and fix the cabinet on the wall.

2. 钻好挂墙托片的安装孔。使用水平仪检查，确保挂墙托片水平。

3. 将脸盆柜挂在墙上，使用合适的入墙胶塞和螺钉，将柜体固定在墙上。

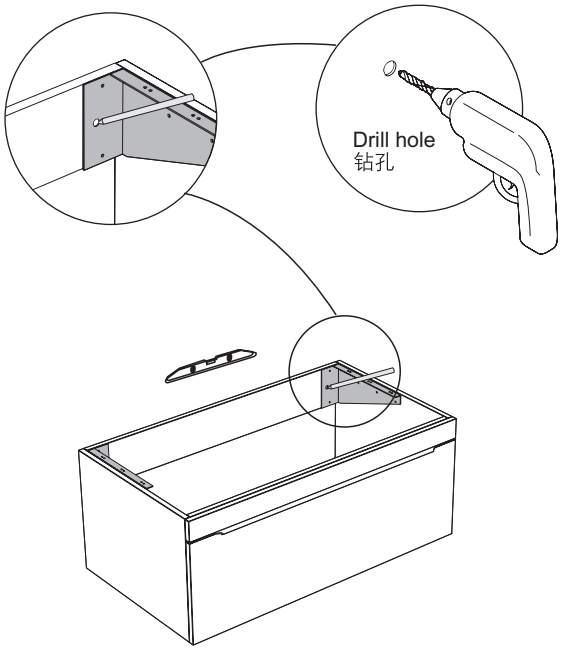

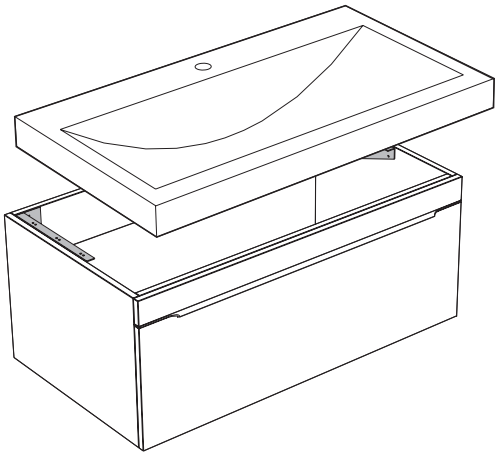

INSTALL SIDE CABINET

1. Mark the wall through two holes at the corresponding positions as illustrated Fig 5.

2. Dismount the washbasin cabinet and put aside. Drill holes at the marked position.

⚠ **Caution!** Avoid the cables and pipes inner set when drilling in the wall.

3. Insert the plugs into the wall.

4. Set the washbasin cabinet onto the brackets. Be sure the cabinet adjusted level and the back board of cabinet appressed to the wall by adjusting the screws of wall clips.

安装侧柜

1. 如图所示通过四个圆孔在墙壁上相应位置做记号。

2. 将侧柜取下放在一边，并在墙上记号处钻孔。

⚠ 小心！在墙壁上钻孔时请务必避开内设的缆线和管道。

3. 将入墙胶塞打入墙壁。

4. 将侧柜放置到墙上，并确认将侧柜调节到水平状态，安装孔对准墙上的胶塞孔，用螺钉锁紧侧柜。

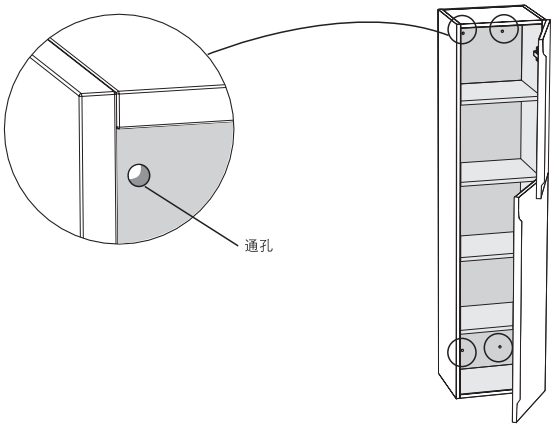

INSTALL MIRROR

1. Mark the wall through two holes at the corresponding positions as illustrated .
2. Dismount the Mirror and put aside. Drill holes at the marked position.
3. Insert the plugs into the wall.
4. Set the Mirror onto the brackets. Be sure the cabinet adjusted level and the back board of cabinet appressed to the wall by adjusting the screws of wall clips.

安装镜子

1. 如图所示通过挂片上的两个圆孔在墙壁上相应位置做记号。
2. 将挂片取下放在一边，并在墙上记号处钻孔。
3. 将入墙胶塞打入墙壁。
4. 将挂片放置到墙上，并确认将挂片调节到水平状态，安装孔对准墙上的胶塞孔，用螺钉锁紧挂片，挂上镜子。

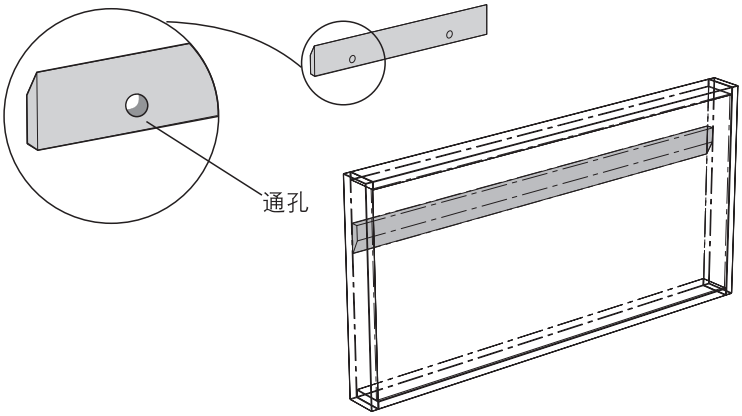

Connect Drainage

1. Inwall drainage (P-Trap)
   Please install the drain assembly and faucet as shown. Please set the water supply and drainage position according to the suppliers instructions. You can adjust the height of shelf to fit the drain assembly.

连接排水管

1. 入墙式排水管(P弯管)
   请按照如图所示安装排水管和龙头。请遵照供应商所提供的说明在墙上设置进/排水管位置。您可以调节搁板的高度以适合排水管的位置。

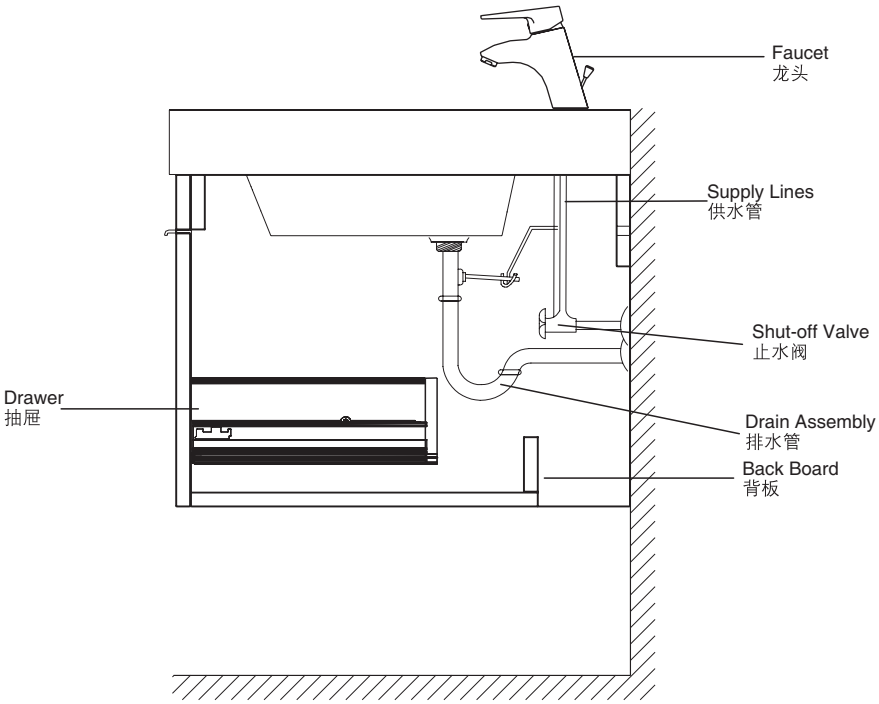

2. Floor drainage (S-Trap)
   Please install the drain assembly and faucet as shown. Please set the water supply and drainage position according to the suppliers instructions.

2. 地排水（S弯管）
   请按照如图所示设置排水管和龙头。请遵照供应商所提供的说明设进水管位置。

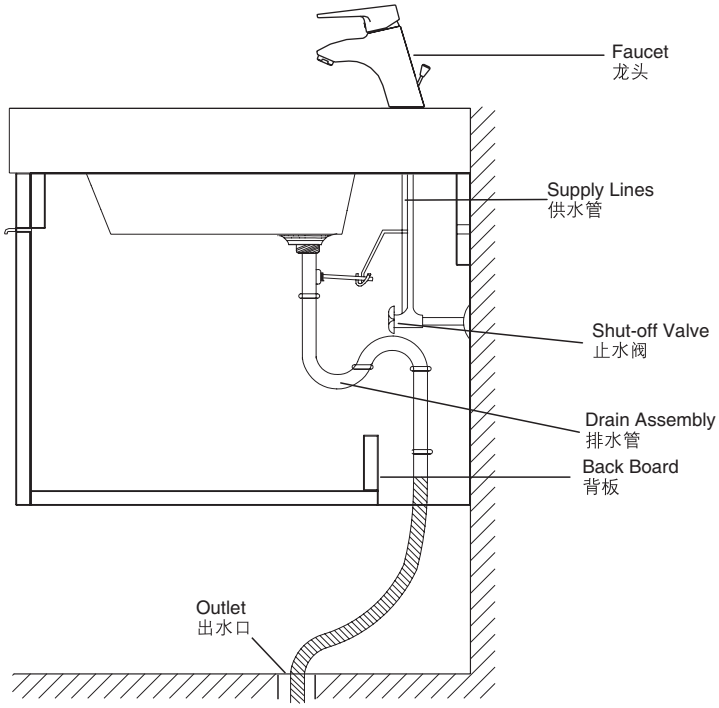

USER MAINTENANCE

Warn! Risk of product damage.

1. Many cleansers contain abrasive and chemical substance which is not suitable for cleaning stainless steel, enamel, plating or plastic products. You may use mild cleansers or soaps to clean the surfaces. Wipe any splashes of cleaner solutions from the surface with clean soft cloth.

2. Maintain ventilation in the bathroom, and separate the dry area from the damp one if conditions permit. Try to open the door and windows of the bathroom and maintain good ventilation.

3. Karat bathroom cabinet are dealt with strict procedures for damp-proof, whose good damp-proof function ensures good performance even in bathroom of huge humidity. Yet do not splash and pour water directly on the bathroom cabinet. Make sure that the bathroom is not over damp and wipe any splashes from surfaces immediately.

4. Maintenance of door board: Clean and wipe door board regularly, and wipe the condensation vapor with dry and soft cloth.

5. Ensure that electrical connections for appliances such as head lamp is insulated wipe mirror surface with chamois regularly to guarantee the persistent excellent performance.

6. Please do not sit, lean or step on the basin cabinet.

日常维护

警告！小心产品受损。

1. 许多清洁剂都含有研磨剂及化学物质，不可用于清洁不锈钢、搪瓷、镀层或塑料制品。这些表面须使用温和的清洁剂或皂液进行清洁，将残余洗涤剂洗干净，然后用干净的软布擦干。

2. 卫生间请保持良好的通风状态，有条件的可以干、湿分离，平常尽量保持浴室空气畅通，养成开窗开门的习惯。

3. 卡丽浴柜都经过严格的防潮处理，但防潮并不是防水，使用时不可随意任浴柜被水浇、溅。良好的防潮性能可以保证在高相对湿度时仍有良好使用性，所以请避免卫生间过于潮湿，遇有水迹要及时擦干。

4. 门板的保养：经常用软布定期清洁、擦拭，洗浴后的冷凝水蒸气应用干布擦净，保持门板的干爽。

5. 照明灯等电器连接要确保绝缘、防潮镜面最好用鹿皮经常擦拭，可以保障使用质量经久如一。

6. 日常使用时，请勿坐、倚、靠、踩踏在脸盆柜上。

ONE -YEARS WARRANTY

Our company provides one years warranty for its drain Our company will,at its election ,repair ,replace or make appropriate adjustment where our company inspection discloses any such defects occurring in normal usage within warranty.

The warranty, including products, is limited clearly. Our company is not responsible for other damages appeared after the warranty. Also,the warranty dose not cover problems arising from labor charges,incorrect use and installation.

一年有限担保

本产品自购买之日起，在正常使用下我司将提供一年的质量担保，经核查后，我司有权决定是修理、更改、还是做适当的调整。

这里的担保，包括产品都已明确地限制在该担保期内。本公司对以后出现的损坏不负有任何责任。担保也不包括外观损伤，使用不当及未按说明书安装的损失。

Shanghai Kohler International Trade Co., Ltd.,
Address: Room324, 2 Xinlin Rd, Waigaoqiao Free Trade Zone, Shanghai
Tel: 021-26062000
Postcode: 200131

上海科勒国际贸易有限公司
地址：上海市,外高桥,保税区,新灵路106号2号楼324室
电话：021-26062000
邮编：200131