卡丽 KARAT®

安装说明书 INSTALLATION INSTRUCTIONS

釉面陶瓷台上式脸盆
ABOVE-THE-COUNTER VITREOUS CHINA LAVATORY
切割图／安装说明书
CUT-OUT TEMPLATE/INSTALLATION INSTRUCTION

K-17255T-WK
爱维修边式台上脸盆
IVY SELF-RIMMING LAVATORY

安装之前

- 台上式脸盆可使用此说明书。请遵照适合您安装需要的说明进行。
- 根据您所需的安装地及安装风格。您可选择水龙头靠墙安装或台上式安装。建议您使用靠墙式龙头。
- 安装之前，先开启新脸盆的安装，并小心检查新的脸盆是否有损坏，如有损坏请直接和供货商或科勒公司售后服务人员取得联系。如检查没有问题，请将脸盆放回包装盒内。到安装时才取用。
- 本说明书所含一切资料，均以印刷时所有的最新产品为准。 科勒公司保留随时更改产品特性，包装或供应情况的权利，恕不另行通知。
- 此说明书包括重要的护理，清洁及保修资料请将此说明书交最终用户留存。
- 卡丽洗脸盆是根据卡丽内部标准制造。与卡丽洗脸盆配件相配，其他洗脸盆配件可能与之不相配。

所需工具及材料
（不随货供应）

- 密封胶
- 安装模板
- 安全眼罩
- 炭笔
- 剪刀
- 卷尺
- 孔锯
- 匙孔锯或军刀状锯
- 电钻（直径为13mm的钻椎或更大的钻椎）
- 螺丝刀

安装台面

将模板放在台面上。

安装靠墙式水龙头：保证出水嘴悬于脸盆池上有足够的距离。需要出水嘴的最小长度资料，可参阅尺寸说明。

安装台上式水龙头：请确认以下信息：
- 首先确认龙头出水嘴的高度适合本产品。
- 请确认龙头和墙面或防溅水板之间的距离足够满足提拉杆的工作需要。
- 同时龙头和盆安装后不干涉，建议安装好的龙头和盆之间的缝隙为25毫米。

注意：在中国一般不会单独安装防溅水板，安装台盆的后墙即为“防溅水板”。
需要了解所需的缝隙，请参阅水龙头安装说明书，并用一软性铅笔标出要安装水龙头的孔的位置。

用一软性铅笔在台面上沿模板划线。仔细的沿软性铅笔切割开口。

⚠ **小心：提防身体受伤或损坏产品。**大型脸盆相当中，需请人帮忙一起搬动及安放。

暂将脸盆放入台面切口的位置。能看见商标。此商标应位于脸盆池内侧，靠近盆池，接近水龙头的地方。

检查脸盆，水龙头及防溅水板或后墙之间的间距是否适当。

将脸盆从切口处移开并将其放入起保护作用的纸箱中。不可将脸盆竖立或将排水一侧放在地上。

钻好水龙头安装孔.

依照制造商的说明书，将水龙头安装在台面上。

依照附在排水装置中的说明书，将排水装置安在脸盆上。 安装排水装置时，请使用足够的清澈型密封硅胶。

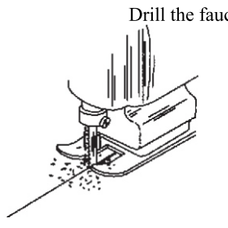

对于瓷砖，木材或者其他多孔状材料，请使用防水密封胶涂抹在台面的切口处。遵守制造商提供的一切说明和警告。待密封胶干后，方可进行安装。请使用50/50异丙醇与水的混合物来清洁切口周围的台面，然后用一干净的抹布擦干。

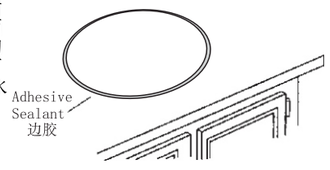

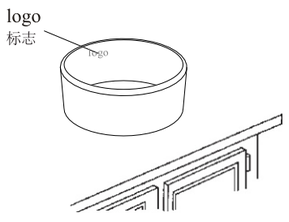

注意：当温度至少为10摄氏度时，才可使用封边胶。使用封边胶的最佳温度范围为21摄氏度至38摄氏度。

将封边胶轻轻地涂在台面切口的四周， 使其横靠在切口洞上。在拆除支撑材料前，请调整一下封边胶涂抹的地方，擦去多余的封边胶，仔细地将支撑封边胶的材料移开。

BEFORE YOU BEGIN

- Use these instructions for above-counter installation. Please follow the instructions that apply to your installation.
- You can choose between a wall-mount or countertop faucet installation, depending upon the setting and styling you desire. We recommended a wall-mount faucet.
- Prior to installation, unpack the new lavatory and carefully inspect it for damage. Please contact lavatory seller or Karat service if there are damages on the lavatory. If the lavatory is ok Please return the lavatory to its protective carton until you are ready to install it.
- All information in these instructions is based on the latest product information available at the time of publication. Kohler China reserves the right to make changes in product characteristics, packaging or availability at any time without notice.
- These instructions contain important care, cleaning, and warranty information please leave these instructions for the end consumer.
- Karat lavatory is made according to karat standard. Karat lavatory can match karat lavatory fittings. Any other lavatory fittings may not fit for karat lavatory.

TOOLS AND MATERIALS REQUIRED
(not supplied)

- Sealant
- Template
- Safety glasses
- Pencil
- Scissors
- Tape measure
- Hole saw
- Keyhole saw or sabar saw
- Dill(1/2 dia. Drill bit or larger)
- Screwdriver

COUNTERTOP INSTALLATION

Position the template on the countertop.

FOR WALL-MOUNT FAUCETS: Be sure to provide sufficient spout overhang into the lavatory basin. See the roughing-in notes for minimum spout length information.

FOR COUNTERTOP FAUCETS: Pay special attention to these information as below:
- Please confirm the height of faucet can match the lavatory.
- Please confirm the room between faucet and finished wall or backsplash can meet lift rod requirement.
- We recommend clearance of at least 25mm between faucet and lavatory to avoid the touch between faucet and lavatory after installation.

NOTE: In china installation will not have separate backsplash. The back wall is the “backsplash”. Refer to the faucet installation instruction for required clearance and mark the preferred faucet hole locations using a soft lead pencil.
Trace the template on the countertop using a soft lead pencil. Cut out the opening carefully following the pencil line.

⚠ CAUTION: Risk of personal injury or product damage.Large lavatories are very happy. Get help lifting the lavatory into place.
Temporarily position the lavatory in the countertop cutout so the logo is visible. The logo is located inside the basin, near the rim, and should be positioned near the faucet. Verify proper clearance between the lavatory, faucet, and backsplash.

Remove the lavatory from the countertop cutout, and return it to its protective carton. Do not stand or store the lavatory on the drain surface.

Drill the faucet installation holes.

Install the faucet to the countertop according to the manufacture's instructions.

Install the drain to the lavatory according to the installation instructions included with the drain. Apply a sufficient amount of clear silicone sealant when you install the drain.

For tile, wood, or other porous materials, apply waterproof sealant around the cutout area of the countertop surface. Follow all manufacture's instructions and warnings. Allow the sealant to dry before proceeding. Use a 50/50 mixture of isopropyl alcohol and water to clean the countertop surface around the cutout area. Wipe dry with a clean cloth.

NOTE: Install the adhesive sealant when the temperature is at least 10 degree Celsius. The preferred temperature range to apply the adhesive sealant is 21 Degree Celsius to 38 Degree Celsius.

Loosely apply the adhesive sealant around the entire countertop cutout so it is alongside the cutout hole. Adjust the placement of the sealant before removing the backing material. Carefully remove the adhesive seal backing material.

小心：提防身体受伤或损坏产品。大型脸盆相当重，需请人帮忙一起搬动及安放。

小心地将脸盆放入台面切口适当位置，向下按牢。连接水龙头供水管。连接排水装置。开启水龙头阀门，检查有无渗漏。

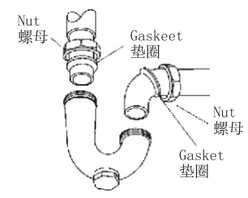

CAUTION: Risk of personal injury or product damage. Large lavatories are very heavy. Get help lifting the lavatory into place.

Carefully position the lavatory in the cutout, and press down firmly. Connect the faucet supply lines. Connect the drain assembly. Open the faucet valves, and check for leakage.

用非腐蚀性的清洁剂来清洗。

Clean up with non-abrasive cleaner.

用户须知（护理和清洁）

为保持脸盆光洁如新，须确保每次使用后彻底冲洗干净，**切勿使用腐蚀性的清洁剂**，以免刮花及破坏脸盆的表面。要清除顽固污垢，油漆或柏油，可使用松油或油漆稀释剂。

IMPORTANT CONSUMER INFORMATION
(CARE AND CLEANING)

To keep your lavatory looking new, make sure you rinse it out thoroughly after each use. DO NOT USE ABRASIVES on this product, as they will scratch and ruin the surface. Stubborn stains, paint, or tar can be removed with turpentine or paint thinner.

终身担保
陶瓷产品终身担保
其陶瓷产品在制造工艺上无瑕疵。
本产品自购买一日起即获得本公司终身的质量保证。凭购货发票，本公司将免费承担由质量问题引起的任何问题。经核查后，本公司有权决定是修理，更换还是作适当的调整。担保也不包括外观损坏，使用不当以及未按说明书安装的损失。
为获得快捷的担保服务，请联系您的销售商或联系：
上海科勒国际贸易有限公司
（请出示销售发票原件作为购货凭证）
这是我们全部的书面担保。

LIFELONG WARRANTY
VC PRODUCTS LIFELONG WARRANTY
VC products are warranted to be free of manufacturing defects. This product is lifelong warranted from date of purchase. We will be responsible for any problems caused by manufacturing defects provided with the invoice. We will, at its election, repair, replace or make appropriate adjustment where. We inspection discloses any such defects occurring in normal usage within one year after purchase.
Damages to the products caused by misuse, abuse and installation that is not in accordance with the owner's manual are not covered by this warranty.
To obtain quick warranty service, please contact your dealer, or contract:
Kohler(Shanghai) International Trading Co. Ltd
(Original sales receipt must be provided as the proof of purchase)
This is our exclusive written warranty.

尺寸图
单位:毫米

ROUGH-IN
UNIT:mm

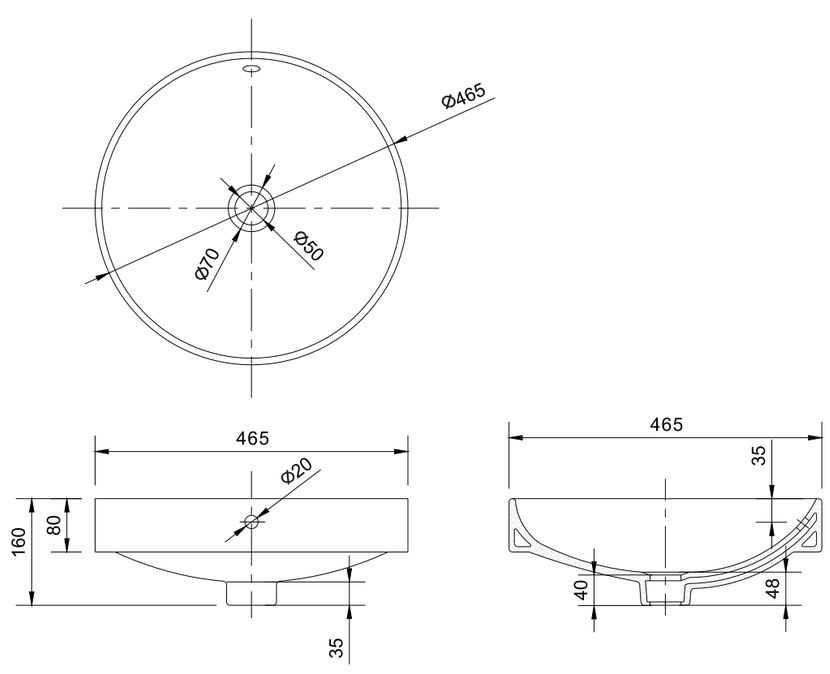

Shanghai Kohler International Trading Co.,Ltd.
Address:Room324,Building No.2,No.106,Xinling RD,Waigaoqiao Free Trade Zone,Shanghai
Tel:021-23052288
Postcode:200131

上海科勒国际贸易有限公司
地址:上海市外高桥保税区新灵路106号2号楼324室
电话:021-23052288
邮编:200131

1097254-T01-A

K-17255T-WK
爱维修边式台上脸盆
IVY SELF-RIMMING LAVATORY

釉面陶瓷台上式脸盆
ABOVE-THE-COUNTER VITREOUS CHINA LAVATORY
切割图
CUT-OUT TEMPLATE

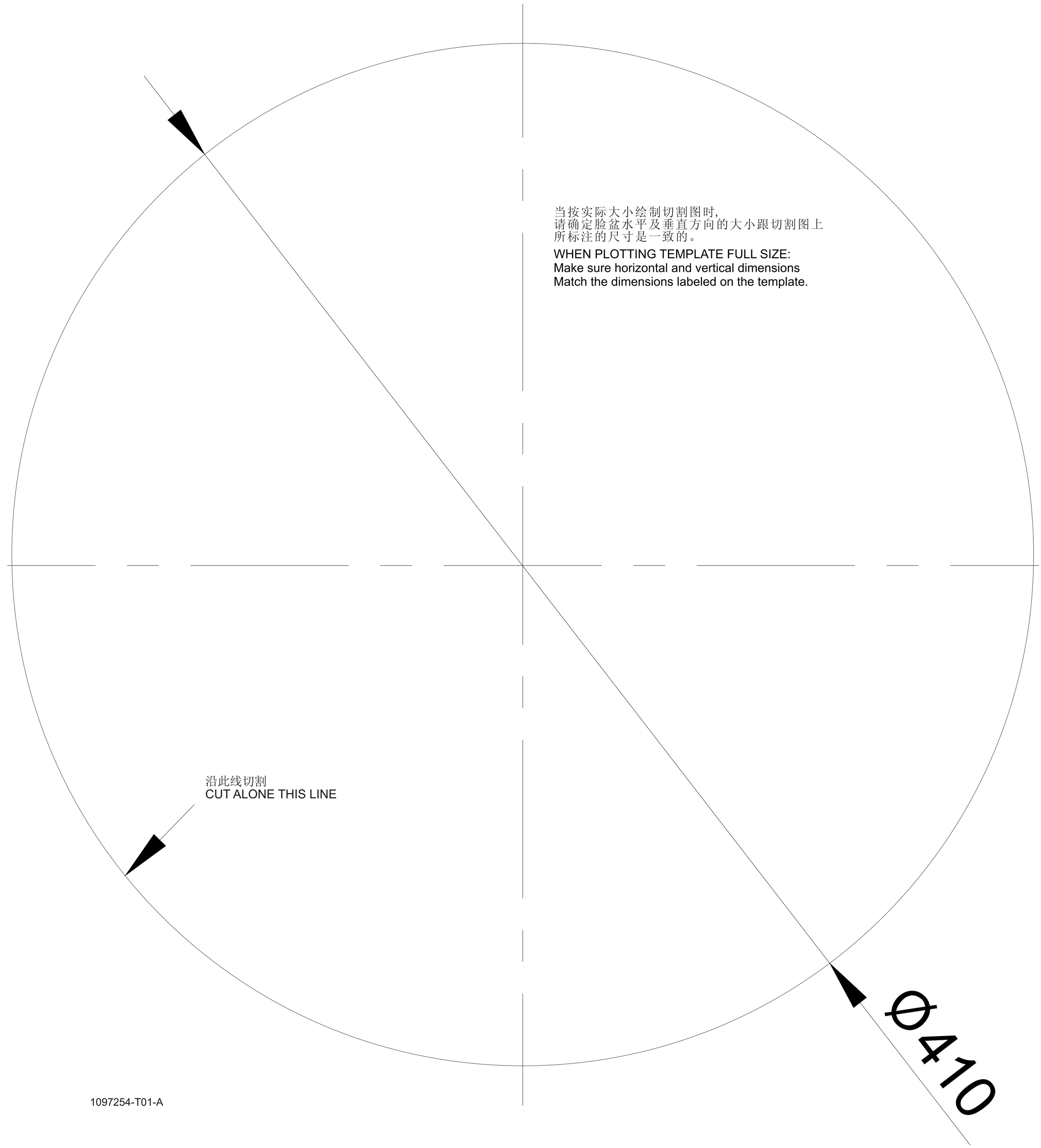

当按实际大小绘制切割图时,
请确定脸盆水平及垂直方向的大小跟切割图上
所标注的尺寸是一致的。

WHEN PLOTTING TEMPLATE FULL SIZE:
Make sure horizontal and vertical dimensions
Match the dimensions labeled on the template.

1097254-T01-A