卡丽 KARAT®

安装说明书 INSTALLATION INSTRUCTIONS

MILANO DUAL FLUSH ONE-PIECE TOILET
305MMRI/400MMRI
WITH SLOW-CLOSE SEAT&COVER
美乐双冲连体座便器，305/400MM坑距
配缓降盖板
45373T-S-WK/45374T-S-WK

BEFORE YOU BEGIN

- Please read these instructions carefully to familiarize yourself with the required tools, materials, and installation sequences. Follow the sections that pertain to your particular installation. This will help you avoid costly mistakes. In addition to proper installation, read all operating and safety instructions.
- All information in these instructions is based upon the latest product information available at the time of publication. karat reserves the right to make changes in product characteristics, packaging, or availability at any time without notice.
- These instructions contain important care, cleaning, and warranty information - please leave instructions for the consumer .

安装之前

- 请小心详阅本指引。以便熟悉所需工具、材料及安装程序。请遵照适用的章节来安装你的座便器，以避免由于安装不当而导致不必要的损失。除了有关正确的安装方法之外，还务请详阅所有操作及安全指引。
- 本指引所载之一切资料，均以印刷时所有之最新产品情况为基础，我司保留权利随时更改产品特性、包装或供应情况，恕不另行通知。
- 本指引也包含了有关护理、清洁及保养等重要资料 - 请交予用户保存。

ORDERING INFORMATION
Milano Dual Flush One-piece Toilet 305mmRI
With Slow-close Toilet Seat&cover 45373T-S-WK
Slow-close Toilet Seat&cover 45375T-WK
Milano Dual Flush One-piece Toilet 400mmRI
With Slow-close Toilet Seat&cover 45374T-S-WK
Slow-close Toilet Seat&cover 45375T-WK

定购信息
美乐双冲连体座便器305坑距，
配缓降盖板 45373T-S-WK
缓降座便器盖板 45375T-WK
美乐双冲连体座便器400坑距，
配缓降盖板 45374T-S-WK
缓降座便器盖板 45375T-WK

用水量说明:
小档4L，大档6L，AVG flush 5.0L为产品名义用水量，计算方法依GB6952-2015 6.2.1项,两次小档加一次大档用水量总和除以3。

ROUGH-IN 尺寸图
单位：毫米

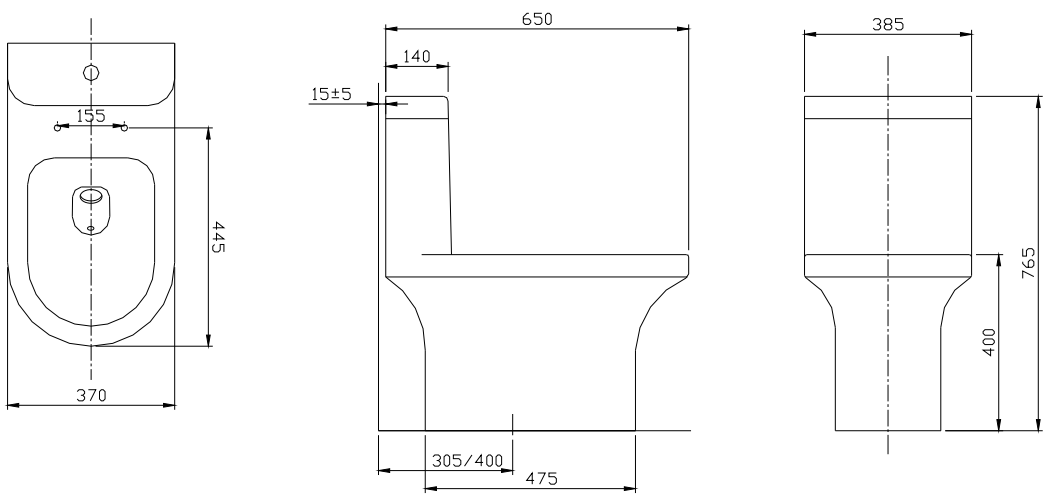

The size is for refernce only,please check the actual size before installation.
此尺寸仅供参考，安装前请仔细测量实际产品。

TOOLS AND MATERIALS REQUIRED (Not supplied)

- Metal file (file cut)
- Tape measure
- Tubing cutter
- Level
- Hacksaw
- Putty knife
- Screwdriver
- Toilet gasket (wax seal)
- Toilet supply shut-off valve

NOTICE: If the existing toilet does not have a supply shut-off valve below the tank, install one before installing the new toilet.

所需工具及材料（不随货供应）

- 锉刀
- 卷尺
- 切管刀
- 水平尺
- 钢锯
- 涂油灰刀
- 螺丝刀
- 座便器垫圈（蜡封）
- 座便器供水管止水阀

注意：如果现有座便器的水箱下方没有止水阀，须在安装新座便器前装妥止水阀。

INSTALLATION 安装

1 The center of supply valve keeps a distance of 200mm from the floor; Above the finished floor line, and 225mm to the Left of the closet flange centerline;

止水阀中心距地200mm左右,水平方向向上，在左边，离法兰中心线130~180mm。

注：安装角阀之前务必试水，已确保管道的畅通。

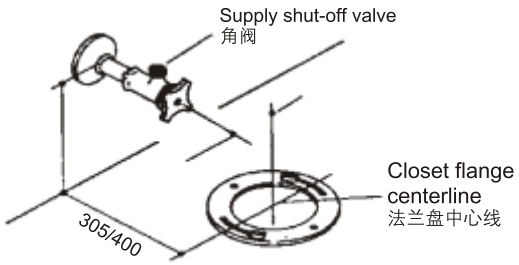

2 If replacing a toilet, remove the old wax.

如需拆除现有座便器，请先刮除旧的蜡环。

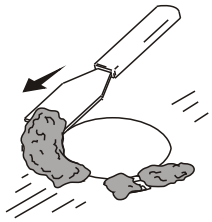

3. Before your install

Use a pencil to trace out the position of the installation hole. Drill holes.

安装之前

将座便器的排污孔对准地面的排污孔，调整好座便器的位置，用铅笔在安装孔的地方做上标记，移开马桶，根据标记钻孔。

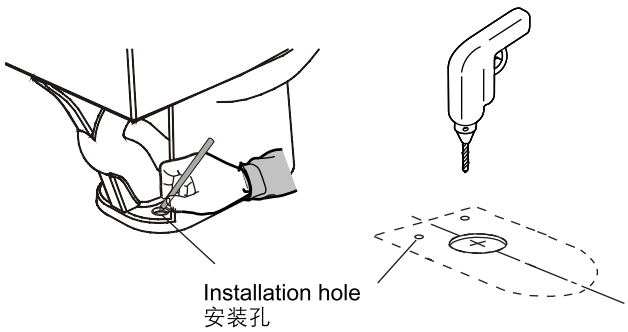

4. Install the flange.

将法兰套在缸体底部。

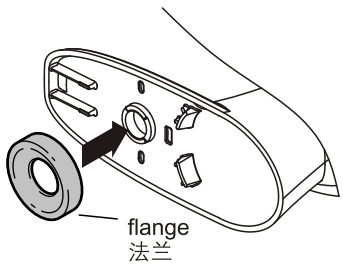

5 Apply weight evenly.

Do not move after placement!

Watertight seal may be broken!

均匀的将座便器下压。

放置后请勿移动！

否则会破坏防水层！

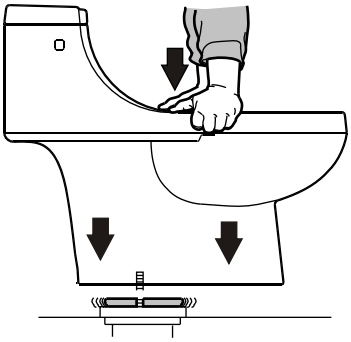

NOTE: Do not lift or rock the toilet when toilet is placed in position, otherwise, it lead to leakage due to gasket wearing. Gasket must be replaced if it is damaged.

注意: 座便器放好后，不可再提起晃动，否则会损坏密封圈的防水效果，造成漏水。

如果密封法兰损坏，必须更换。

6 Install the Toilet

Install the bolts into the bracket and tighten evenly.

Do not overtighten!

如图所示，使用螺栓、垫圈和螺母将座便器固定到地面上。

不要拧的太紧

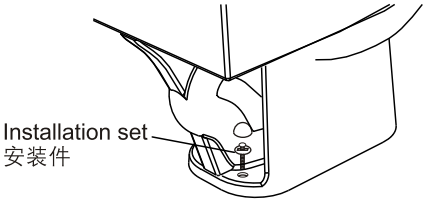

7 Connect supply and turn on the water.

连接供水管，打开水源。

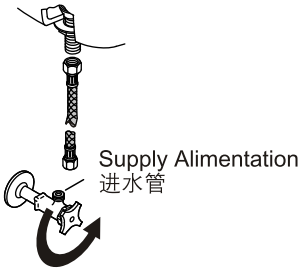

8 Flush several times and check for leaks.

冲水数次，检查进水管是否漏水。

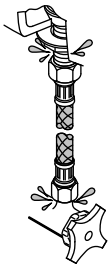

9 Install the seat. Use the supplied seat bolts and washers. Periodically check for leaks for several days following the installation.

安装盖板。使用附带的盖板螺栓和垫圈。安装后定期检查漏水情况。

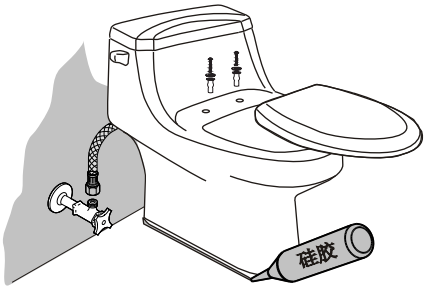

IMPORTANT CONSUMER INFORMATION

CONSUMER RESPONSIBILITIES

If you live in a hard water area, make certain that the holes in the toilet rim are kept clean to ensure proper bowl flushing. Toilet bowl cleaners should be used at least once a week. Use a long-handled brush to clean the rim holes, and to clean as far into the trap as possible to prevent mineral deposits from forming.

Most toilet bowl cleaners are not harmful to the vitreous china surface of the toilet bowl. Please follow the bowl cleaner manufacturer's instructions carefully.

Do not use abrasive cleaners or solvents.

⚠ WARNING: Risk of property or product damage. Do not use in-tank cleaners. Products containing chlorine (calcium hypochlorite) can seriously damage fittings in the tank. This damage can cause leakage and property damage.

Karat Company shall not be responsible or liable for any damage to these tank fittings caused by the use of cleaners containing chlorine (calcium hypochlorite).

⚠ CAUTION: Don't use any cement while installing the toilet. Heat expansion of the toilet may damage the feet of the toilet. karat will not be responsible for any damage because of using cement.

用户须知

用户责任

如果你居住地方的水质是硬性，你必须保持冲水孔清洁，令座便器冲水正常。每星期应最少使用座便器清洁剂清洁一次，用长把手的刷子清洁冲水孔，并尽量伸入排污管洗刷，防止矿物质积聚。

大多数马桶清洁剂对座便器表面是无害的。请认真遵循马桶清洁剂制造商的指示来操作。

请勿使用腐蚀性清洁剂或溶剂。

⚠ **警告：提防楼宇受损或损坏产品。**请勿使用水箱内用清洁剂。含氯（次氯酸钙）的清洁剂会严重破坏水箱配件，从而引起渗漏，或对楼宇结构造成损坏。

我公司对此类因使用氯(次氯酸钙)而引致的水箱装置损毁，概不负责。

⚠ **警告：在安装本座便器时切勿使用任何水泥。**因为水泥的热膨胀可能使座便器的脚部挤破或损坏。卡丽对所有因为水泥安装而引起的座便器破裂恕不负责。

LIFE-LONG WARRANTY

This product is warranted for one year from date of purchase. Our company will be responsible for any problems caused by manufacturing defects provided with the invoice. Our company will, at its election, repair, replace or make appropriate adjustment where our company inspection discloses any such defects occurring in normal usage within one year after purchase.

The warranty, including products, is limited clearly. Our company is not responsible for other damages appeared after the warranty. Also, the warranty dose not cover problems arising from labor charges, incorrect use and installation.

终身担保

本产品自购买之日起，陶瓷部分即获得我司的终身质量担保。凭购买发票，我司将免费承担由制造质量引起的任何问题。经核查后，我司有权决定是修理，更换还是做适当的调整。

这里的担保，包括产品都已明确地限制在该担保期内。我司对以后出现的损坏不负有任何责任。担保也不包括外观损伤，使用不当及未按说明书安装的损失。

Shanghai Kohler International Trade Co., Ltd.,
Address:Room 324, Building 2, No.106
Xinling Rd., Waigaoqiao Free Trade Zone,
Shanghai
Tel: 021-26062000
Postcode: 200131

上海科勒国际贸易有限公司
地址：上海市外高桥保税区新灵路106号2号楼324室
电话：021-26062000
邮编：200131

卡丽 KARAT

维修零件图 SERVICE PARTS PAGE
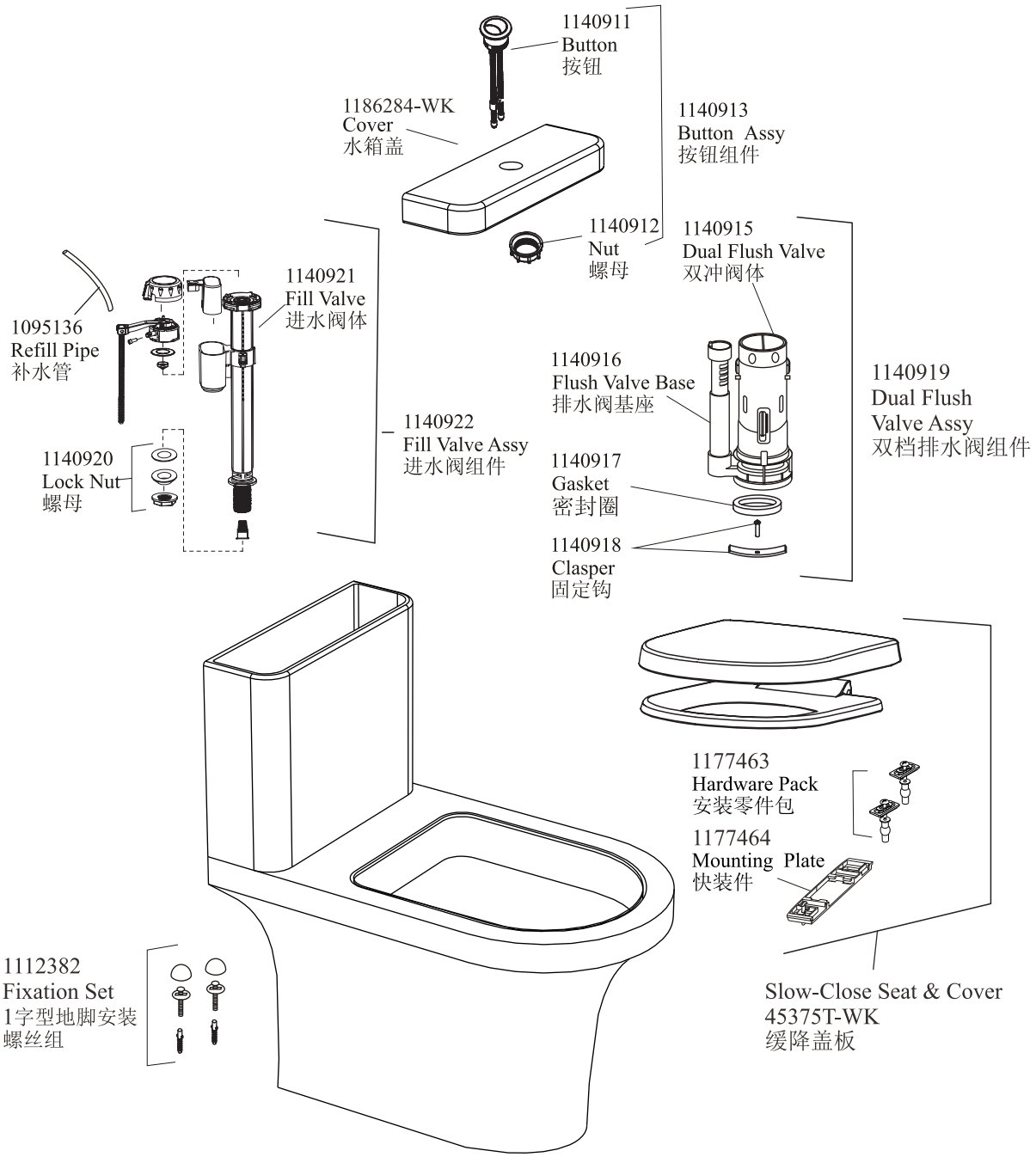
MILANO DUAL FLUSH ONE-PIECE TOILET
305MMRI/400MMRI
WITH SLOW-CLOSE SEAT&COVER
美乐双冲连体座便器，305/400MM坑距
配缓降盖板
45373T-S-WK/45374T-S-WK