卡丽 KARAT

安装说明书 INSTALLATION INSTRUCTIONS

RUBY 3/6L ONE-PIECE TOILET 305/400MMRI,
WITH SLOW-CLOSE SEAT & COVER
露比3/6L升连体座便器305/400MM坑距，配缓降盖板
12512T-S-WK/12544T-S-WK

BEFORE YOU BEGIN 安装之前

Please read these instructions carefully to familiarize yourself with the required tools, materials, and installation sequences. Follow the sections that pertain to your particular installation. This will help you avoid costly mistakes. In addition to proper installation, read all operation and safety instructions.
All information in these instructions is based upon the latest product information available at the time of publication.

请仔细阅读说明书，熟悉所需工具、材料和安装顺序。参照相关章节完成您所需的安装，以避免昂贵的损失。除了正确的安装外，请详阅所有的操作和安全说明。
本说明书所含的一切资料均以印刷时所有的最新产品为准。

TOOLS AND MATERIALS REQUIRED

(Not Supplied)
* 254 mm (10") adjustable wrench
* 305 mm (12") pipe wrench
* Tape Measure
* Level
* Drill (10mm. Drill bit)
* Screwdriver
* Gasket flange (Don't Supplied)
* Toilet installation bolt set (Supplied)
* Shut-off valve 1/2"
* Water supply flexible hose.

所需工具及材料

(不随货供应)
* 254毫米活动板钳
* 305毫米喉管板钳
* 卷尺
* 水平尺
* 电钻(钻头直径10mm或更大)
* 螺丝刀
* 密封法兰 (不提供)
* 座便器安装螺栓(已提供)
* 1/2英寸座便器止水阀
* 供水软管。

ORDERING INFORMATION

Ruby 3/6L one-piece toilet 305mmRI,
with slow-close seat & cover.....12512T-S-WK
Ruby 3/6L one-piece toilet 400mmRI,
with slow-close seat & cover.....12544T-S-WK
Slow-close toilet seat & cover.....12559T-WK

定购信息

露比3/6升连体座便器305mm坑距，
配缓降盖板.....12512T-S-WK
露比3/6升连体座便器400mm坑距，
配缓降盖板.....12544T-S-WK
缓降座便器盖板.....12559T-WK

ROUGH-IN 尺寸图
单位：毫米

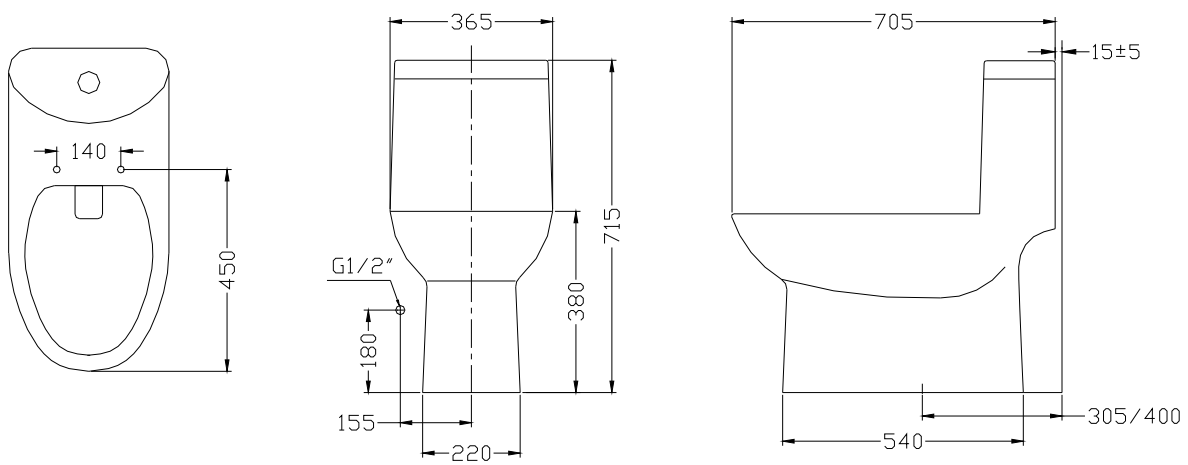

1. 安装供水管止水阀

止水阀中心离地180mm
水平方向上，在左边，离法兰中心线180mm；
供水管出口管凸出完工墙67mm。

注：安装脚阀之前请务必试水，以确保管道的通畅。

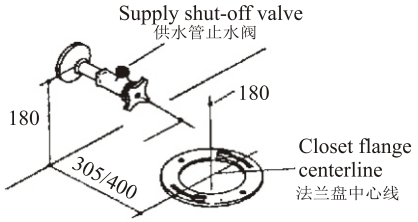

1. TO INSTALL SUPPLY VALVE
The center of supply valve keeps a distance of 180mm from the floor;
Above the finished floor line, and 180mm to the Left of the closet flange centerline;
Supply outlet shall project the finished wall 67mm.

---

2. 预安装

将座便器的排污孔对准地面的排污孔，调整好座便器的位置，用铅笔在安装孔的地方做上标记。

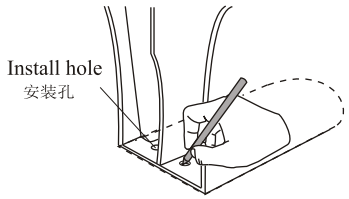

2. Before your install
Use a pencil to trace out the position of the installation hole.

根据铅笔的标记用电钻在地面上钻孔。

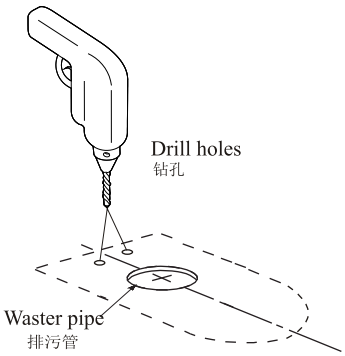

Drill holes.

---

3. 安装座便器

1)确保管道畅通；
2)密封垫圈套于座便器出水口；
3)对准地面排水口，将座便器水平置于地上，均匀的将座便器下压，保证密封圈的密封；
4)安装地脚螺钉，装饰盖；
5)在座便器底座打一圈防水硅胶。

注意：座便器放好后，不可再提起或晃动，否则会损坏密封垫的防水效果。造成漏水；

如密封圈损坏，必须更换。

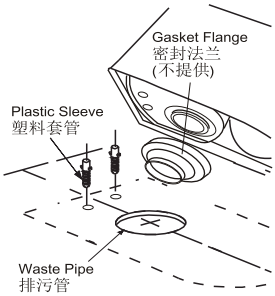

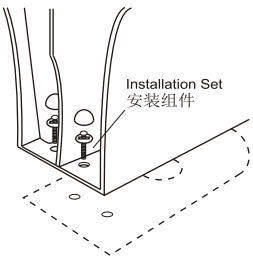

3. TO INSTALL THE TOILET
1)Ensure the pipe is cleared;
2)Gasket shall wrap toilet outlet;
3)Place the toilet on the floor and align bowl outlet with floor outlet;
4)install the bolt cap accessory pack
5)Apply a bead of water-proof silicone sealant around the bowl.

NOTE: Do not lift or rock the toilet when toilet is placed in position, otherwise, it lead to leakage due to gasket wearing.

Gasket must be replaced if it is damaged.

4. 连接供水管与水箱

5. 打开脚阀，冲水几次检查水件 水箱配件出厂时已调好,(如无必要建议不要自己调节)

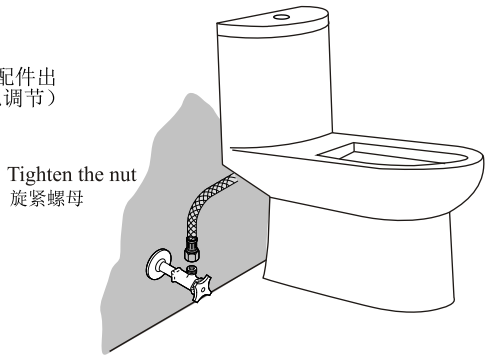

4. To connect supply valve

5. Rinse supply hose, adjust water level and install toilet seat

6.安装盖板

在座便器安装孔的上方放置安装板，把螺丝分别插入垫圈中。移动垫圈，使之卡在安装板的凹槽内，拧紧螺丝，但不要拧得过紧，以便调整。

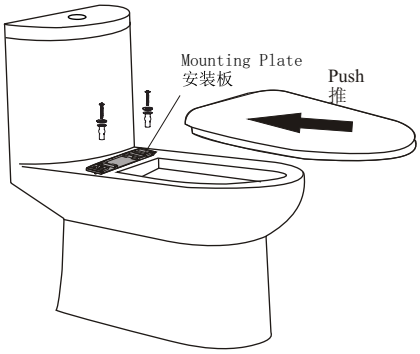

对正座圈底部和安装板之间得卡槽，把座圈在
座便器座圈面上向水箱方向移动，
当听到咔嚓声说明安装完成。

注意:安装板可能需要调节来完全地对准座便器相对位置。

6. InstallTheSeat

Position the mounting plate over the toilet mounting holes.
Slide a washer onto each of the bolts.
Insert a bolt through the mounting plate and position the washers so they rest in the grooves of the mounting plates.
Loosely thread the bolts into the inserts. Do not overtighten for future adjustment.

Align the slot on the mounting plate with the groove located below the toilet seal, slide the seat onto the mounting plate until you feel it snap into place.

NOTE: The mounting plate may need to be adjusted to properly align the seat.

LIFE-LONG WARRANTY

This product is warranted for one year from date of purchase. Our company will be responsible for any problems caused by manufacturing defects provided with the invoice. Our company will, at its election, repair, replace or make appropriate adjustment where our company inspection discloses any such defects occurring in normal usage within one year after purchase.

The warranty, including products, is limited clearly. Our company is not responsible for other damages appeared after the warranty. Also,the warranty dose not cover problems arising from labor charges,incorrect use and installation.

终身担保

本产品自购买之日起，陶瓷部分即获得我司的终身质量担保。凭购买发票，我司将免费承担由制造质量引起的任何问题。经核查后，我司有权决定是修理，更换还是做适当的调整。

这里的担保，包括产品都已明确地限制在该担保期内。本公司对以后出现的损坏不负有任何责任。担保也不包括外观损伤，使用不当及未按说明书安装的损失。

Shanghai Kohler International Trade Co., Ltd.,
Address: Room324, 2 Xinlin Rd,
Waigaoqiao Free Trade Zone, Shanghai
Tel: 021-26062000
Postcode: 200131

上海科勒国际贸易有限公司
地址：上海市外高桥保税区新灵路106号2号楼324室
电话： 021-26062000
邮编： 200131
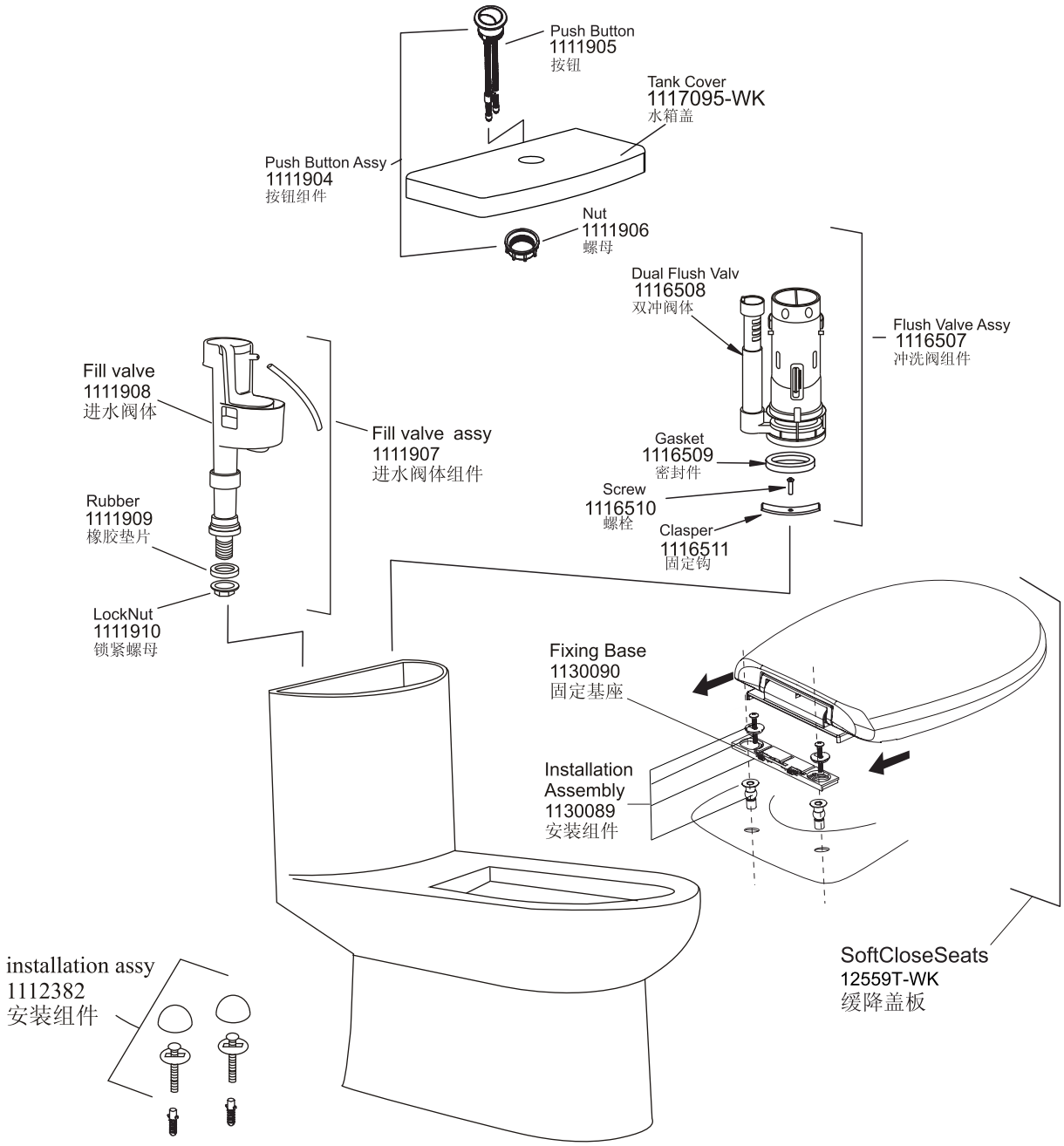
RUBY 3/6L ONE-PIECE TOILET 305/400MMRI, WITH SLOW-CLOSE SEAT & COVER
露比3/6L升连体座便器305/400MM坑距，配缓降盖板
12512T-S-WK/12544T-S-WK